DEPARTMENT OF CONSUMER AND REGULATORY AFFAIRS

DECK GUIDE

WITH CURRENT 2017 DISTRICT OF COLUMBIA BUILDING CODES

For residents who own one- and two-family dwellings and want to construct a single-floor deck, permitting for this type of project just got easier.

dcra
WE ARE WASHINGTON DC
GOVERNMENT OF THE DISTRICT OF COLUMBIA
MURIEL BOWSER, MAYOR

Deck Details

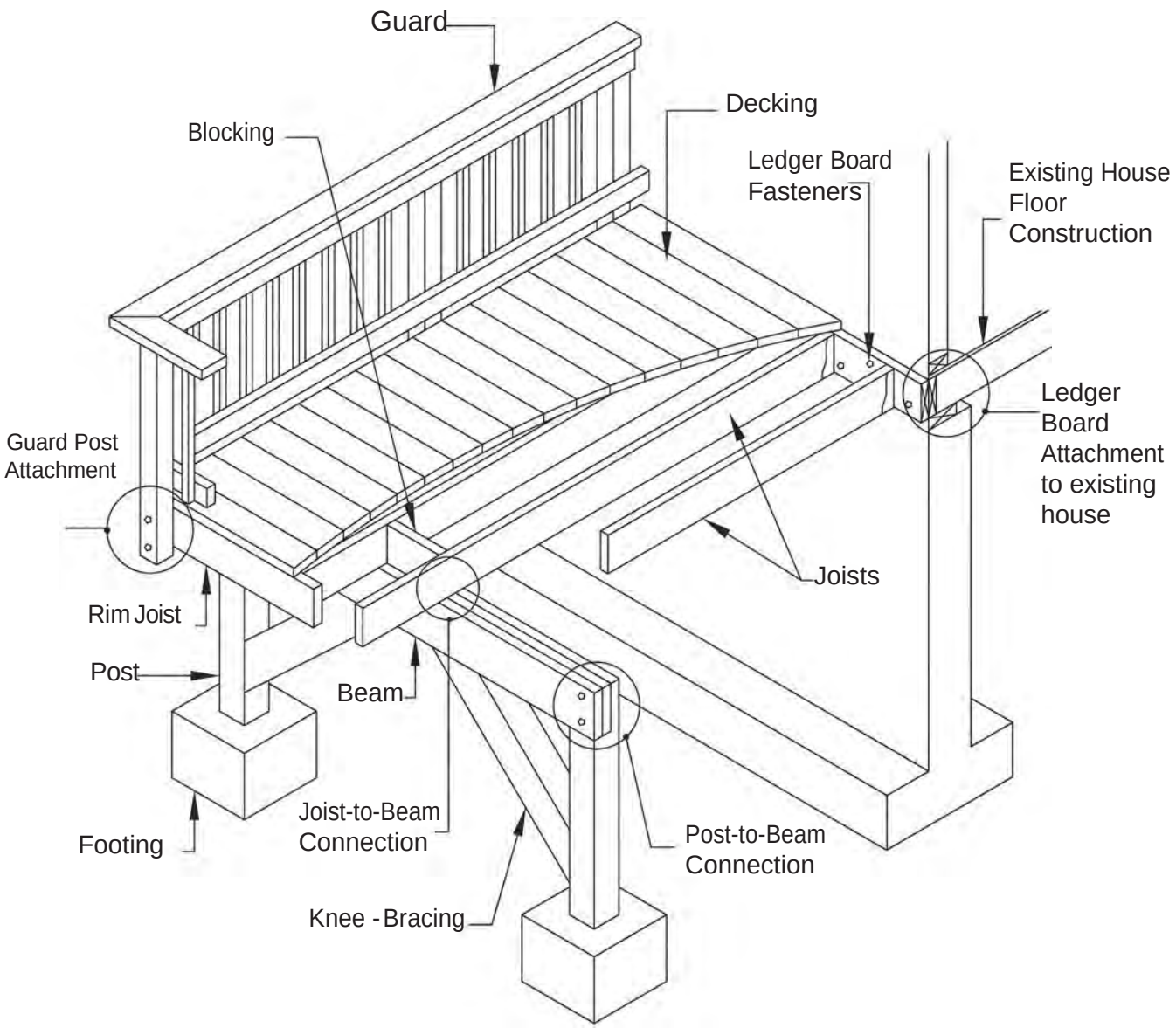

Section 1 - General Notes 4

Design Considerations 6

Material Specifications 6

Section 2 - Deck Surface 8

Decking 8

Safety Glazing 8

Electrical 8

Section 3 - Joists 10

Joist Size 10

Joist Framing at Projections..... 12

Joist Hangers..... 12

Joist-to-Beam Connection 12

Section 4 - Beams 14

Beam Size 14

Beam Assembly 14

Section 5 - Footings and Posts 18

Footing Size 18

Post-to-Footing Connection 18

Post and Maximum Height..... 19

Beam-to-Post Connection 19

Section 6 - Ledger Attachment 21

General Requirements..... 21

Ledger Board Fasteners..... 21

Section 7 - Lateral Support 26

Bracing Methods 26

Bracing-to-Framing Connection 26

Section 8 Guards 30

Guard Construction 30

Guard Post Connections 30

Section 9 - Stairs 33

Stair Geometry 33

Stair Landing 33

Stair Construction..... 33

Section 10 - Deck Design Details **38**

Section 11 - Appendix..... **39**

General Notes

COMMON DECK GUIDELINES

All deck construction requires plan review, permits, and inspections in the District of Columbia. Use of this guide provides an overview of code compliance requirements for deck construction and lays out the specific steps involved in the process. Following this guide ensures design and construction of decks in the District is consistent and code compliant. These guidelines apply to all new, single level decks and replacements and expansions to a previously approved deck.

Decks excluded from these guidelines include: roof-top decks, decks on multi-family buildings decks that are proposed to be roofed or enclosed, commercial buildings, decks that are greater than 1,000 square feet, deck foundations adjacent to property lines, finished deck heights more 10 feet above grade, and land disturbance greater than 50 square feet.* (*Land disturbance that affects adjacent properties requires neighbor notification.)*

This is a general guideline for deck construction. Additional code requirements may apply to any specific project. The permitting sequence involves:

- Plan Preparation
- Plat Submission
- Permit Application
- Plan Review (Structural, Electrical, Zoning)
- Inspections

Framing is required if applicable (decks <4 feet in height).

Prior to designing your deck, read this publication thoroughly and pay close attention to each applicable detail. Once you have selected the size of your deck, use the joist and beam span tables to determine their size, spacing, span lengths and overhang dimensions.

Use the remaining details to guide you in determining the other design elements of your deck. Ensure you record your deck design on the "Deck Design Details" section on page 38.

If you have questions, please contact the Department of Consumer and Regulatory Affairs (DCRA) at 202-442-4400, TTY 202-123-4567, via email, through our online customer inquiry form or live chat all available at dcra.dc.gov.

PLAN PREPARATION

Using the graph paper provided, illustrate your desired deck layout. The layout should include dimensions of the deck and any steps or railings. A side view of the deck should also be provided.

PLAT SUBMISSION

Information about plats can be found here. Your DC Surveyor's plat will need dimensions showing all existing buildings and the proposed deck and on-site off-street parking. The proposed deck shall be depicted and the distance of the deck to the side and rear property lines shall be indicated on the plat. Indicate the lot occupancy calculation on the plat (e.g. the amount of existing square footage on the property – single-family home, garage, accessory structures, and proposed deck). For more information about lot occupancy and set-back requirements, please see the Appendix on page 39.

APPLICATION AND APPROVAL PROCESS

1. Using this guide will insure swift review and approval of your ***Deck Permit***.
2. Directions how to apply online for a ***Deck Permit*** can found here.
3. After disciplines have reviewed and approved the plans, plats and supporting documents, the building permit will be issued.
4. Applicant pays the issuance fee and the building permit is issued. (See Appendix for Fee Schedule)
5. Inspections are required during the construction process.

ZONING CONSIDERATIONS

The zoning review will focus on verifying that the proposed deck complies with the applicable set-back and lot occupancy requirements. Lot occupancy is the percentage of the total area of a lot that is occupied by the total building area of all buildings and structures on the lot. This includes all existing construction and proposed construc- tion and is calculated by adding the total square footage of the existing construction (e.g. house, garage, shed and any other structure 4 feet or greater in height above grade) and the square footage of the proposed construction (e.g. deck) together and dividing it by the total area of the lot. For example, a lot is developed with a house and a garage that have a total square footage of 1,500 square feet. The applicant wants to con-struct a deck that is four feet in height and 250 square feet. 1,500 square feet plus 250 square feet equals 1,750 square feet. The lot area is 5,000 square feet. Divide 5,000 square feet (lot area) by 1,750 square feet (total existing and proposed construction) equals .035 or 35% lot occupancy. See Appendix on page 38 specific regulations by zone.

BUILDING PERMIT ISSUANCE

After the assigned reviews have been completed, the customer goes to the Issuance desk, documents are checked for completeness, remaining fees are paid, and the building permit is issued. Fees can be paid by cash, check, and credit card. See Table Permit Fees Chart in the Appendix.

INSPECTIONS

Following construction, DCRA must conduct required inspections of Deck construction to en-sure compliance with the approved plans. The DC construction inspections are scheduled through DCRA's phone-in inspection scheduling system (IVR). Further information can be found here: http://dcra. dc.gov/service/schedule-construction-inspection. The required inspections include footing, framing and final. If the finished deck level is smaller than four feet above grade, a framing inspection is required prior to decking.

FOOTING INSPECTIONS

Decks require a footing inspection after all excavation has been completed and before the footings, whether concrete or block are installed. The inspection code for a deck footing inspection is 160.

FRAMING INSPECTION

A framing inspection should be requested before the deck boards are installed. This enables the building inspector to verify framing, appropriate connections and flashing. The inspection code for framing inspection is 100.

FINAL INSPECTION

A final inspection is required when the deck is complete, with all handrails and guard rails installed, and before use. The inspection code for a final inspection is 17O.

"USE THE JOIST AND BEAM SPAN TABLES TO DETERMINE THEIR SIZE, SPACING, SPAN LENGTHS AND OVERHANG DIMENSIONS"

MATERIAL SPECIFICATIONS

1. Lumber shall be preservative-treated, southern pine, grade #2 or better. Lumber not native to North America, such as IPE, may be used as decking only; its use in guards is prohibited.
2. Lumber in contact with the ground shall be rated as "ground-contact."
3. Concrete in footings shall have a minimum compressive strength of 3,000 PSI.
4. Nails shall be threaded, ring-shanked or annular grooved. A half inch pilot hole shall be used at toe- nailing locations.
5. Carriage-bolts may be substituted where through- bolts are specified provided carriage-bolt washers (with square holes) are installed at the bolt head.
6. Fasteners shall be hot-dipped galvanized, stainless steel or approved for use with preservative-treated lumber.
7. Hardware and mechanical connectors, e.g., joist hangers or post anchors, shall be stainless steel or galvanized with 1.85 ounces of zinc per square foot (G-185 coating). Look for product lines such as "Zmax," "Triple Zinc" or "Gold Coat."
8. Flashing at ledger board connections (see Page 21) shall be copper (with copper nails only), stainless steel, UV resistant plastic or galvanized steel with a G-185 coating.
9. Plastic composites are materials composed of bound wood and plastic fibers. Permissible as noted in this document, plastic composites must bear a label indicating its compliance with ASTM D 7032. Plastic composite's label and installation instructions must be available to the inspector.
10. When using plastic composites, exercise cautions as some members do not have the same capacity as their wood equivalents.
11. PVC decking and guards are permitted provided they have a valid evaluation report from an accredited listing agency such as the International Code Council – Evaluation Service. Installation shall be in conformance with the report and the manufacturer's instructions which must be available to the inspector.
The use of other materials and products, other than those permitted herein, shall be approved by the city prior to installation.

DESIGN CONSIDERATIONS

1. These details are based on the prescriptive requirements of the 2015 International Residential Code industry best-practices and applicable referenced standards such as the National Design Specification for Wood Construction.
2. Framing members in these details are designed for a 40 PSF live load, 10 PSF dead load, normal loading duration, wet service conditions and deflections of l/360 for main spans and l/180 for overhangs with a 220-pound point load.
3. The use of these details to design and construct multi-level decks is prohibited.
4. Deviation from these details require approval by government staff prior to construction.
5. Decks constructed in accordance with these details are not approved for privacy screens, planters, built-in seating or hot tubs.
6. Decks must be designed to ensure rain and melting ice and snow flow away from the existing house.
7. Publication "DCA6" from the American Wood Council can also be used to obtain a permit in Washington, DC Go to awc.org to download.

"Deviation from these details require approval by DC government staff prior to construction"

Deck Surface

Deck surfaces shall be preservative-treated or a species with naturally preserative properties for all wood, lumber and supporting wood columns. Decking shall be per TABLE 1 and placed perpendicularly or at an angle up to 45 degrees to the joists. Wood decking shall be attached per FIGURE 1. If installed wet, place decking with no gap so after drying a 1/8 inch gap is created. The use of hidden fasteners and similar attachment devices is prohibited. Each decking member shall bear on a minimum of three joists or blocking between joists. Placement and attachment of plastic composites shall be per manufacturer's instructions.

Figure 1: Typical Decking

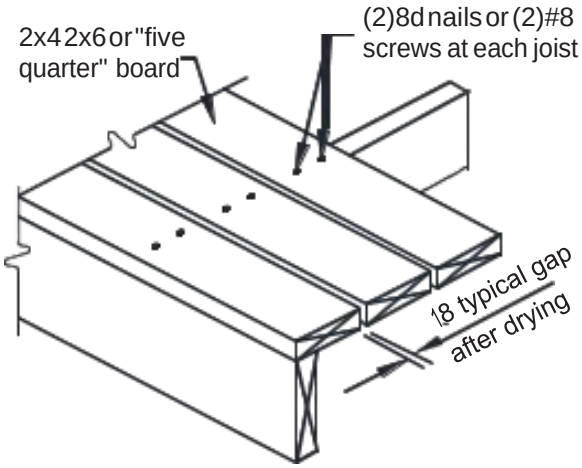

Table 1: Decking Requirements and Maximum Joist Spacing

Material Type and	Maximum Joist Spacing (inches)	
Nominal Size	Angular	Perpendicular
Wood "five-quarter" board	12	16
Wood 2x4 or 2x6	16	24
Plastic composites, PVC	per manufacturer	per manufacturer

SAFETY GLAZING

To reduce injury due to an accidental impact, safety glazing in window glass is required when the existing house wall encloses any portion of the deck surface or acts as a barrier to stairs, landings and areas at the top and bottom of the stairs.

Windows adjacent a deck surface: As shown in FIGURE 2, single panes of glass meeting all the requirements listed below must be safety-glazed.

- Glass area is greater than 9 square feet,
- The bottom edge of the pane is less than 18 inches above the walking surface of the deck, and the top edge of the pane is greater than 36 inches above the walking surface of the deck.

In the absence of safety glazing, a horizontal rail across the window must be installed. The rail must meet the requirements of a stair handrail per Page 33.

Windows adjacent stairways and landings: Single panes, partially or wholly located in the hatched area shown in FIGURE 2, must be safety glazed. In the absence of safety glazing, a stair guard per Page 33 or handrail per Page 33, must be constructed to separate the window from the stairway.

ELECTRICAL

Outlets: Decks shall have a minimum of one electrical outlet along the perimeter of the deck and within 6.5 feet of the floor.

Stair lighting: Each stairway section shall have a light source that illuminates all stairs and landings. Lights shall be operated from interior switches, motion detectors or timed switches. Low voltage lighting at each stair tread is permissible.

Figure 2: **Safety Glazing Requirements**

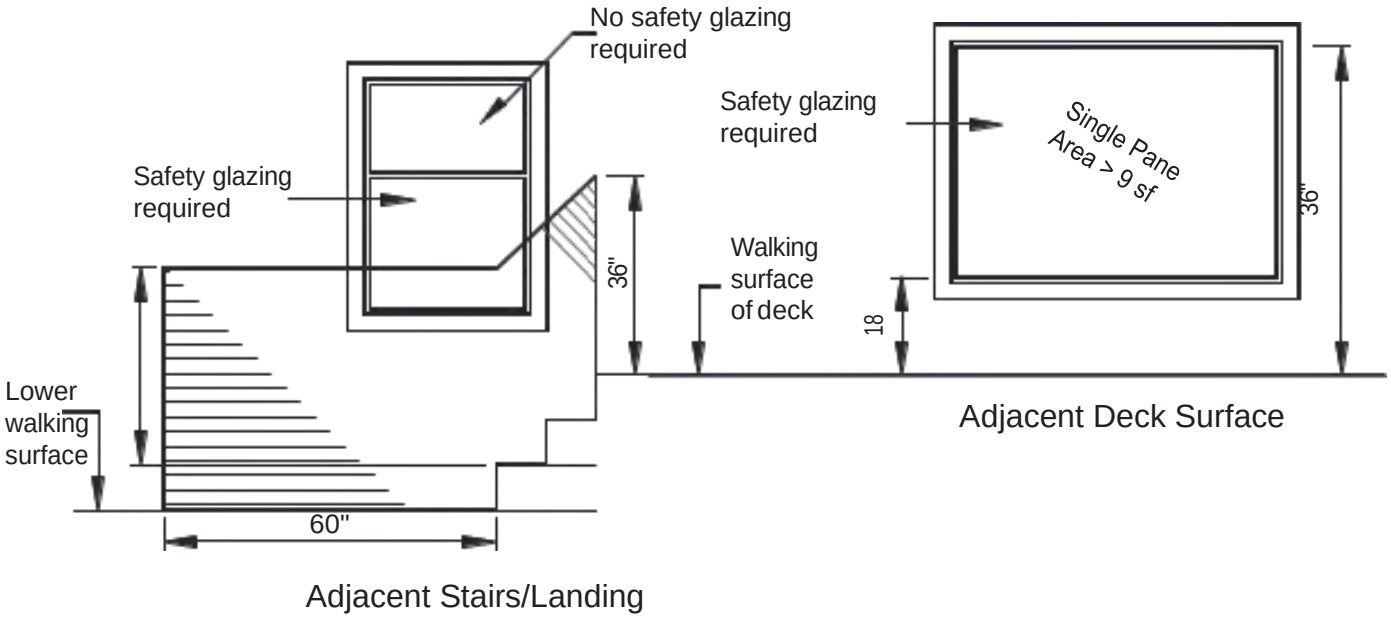

Joists

• Joists are repetitively placed framing members spaced at 12, 16 or 24 inches on center which are supported at each end by a beam or ledger board.
• Single span decks are framed with joists that have one span between supports (not including overhang) as shown in FIGURES 3 and 4. Multi-span decks have joists with more than one span which bear on multiple beam as shown in FIGURES 5 and 6.
• At the house connection, joists bear on the attached ledger board. Joists on a free-standing deck do not connect to the house; instead bearing is provided by an additional beam located at or near the house wall as shown in FIGURE 7.

JOIST SIZE

• Joist span length is measured from the ledger board to the centerline of the supporting beam or between the centerlines of the supporting beams at each end.
• Joists are permitted to overhang past a dropped beam; joist span length does not include overhangs.
• The joists' design is based on spacing, size and span length. Use TABLE 2 to determine joist size and the corresponding maximum allowable overhang. *Note: the overhang dimension shall never exceed one-fourth of the actual joist span.*
• Provide full depth 2x blocking between overhanging joists above beam locations. Exception: blocking may be omitted if the overhang is less than or equal to 2 feet.
• Where blocking between joists is required, attach blocking using joist hangers at each end or by toe- nailing blocking to joists at each end, top and bottom with 10d nails.
• Attach a continuous rim joist or blocking at the joist ends as shown in FIGURES 3, 5 and 7. Attach a rim joist to the end of each joist with (3)10d nails or (3)#10 by 3-inch wood screws.
• When choosing 2x6 joists, the corresponding ledger board must be a 2x8 minimum. See Page 21 for more information.
• Guards cannot be attached to decks framed with 2x6 joists. See Page 30 for more information.

Table 2: Maximum Joist Span

Per 2015 International Residential Code

TABLE R507.5
DECK JOIST SPANS FOR COMMON LUMBER SPECIES[f] (ft. - in.)

SPECIES[a]	SIZE	SPACING OF DECK JOISTS WITH NO CANTILEVER[b] (inches)			SPACING OF DECK JOISTS WITH CANTILEVERS[c] (inches)		
		12	16	24	12	16	24
Southern pine	2 × 6	9-11	9-0	7-7	6-8	6-8	6-8
	2 × 8	13-1	11-10	9-8	10-1	10-1	9-8
	2 × 10	16-2	14-0	11-5	14-6	14-0	11-5
	2 × 12	18-0	16-6	13-6	18-0	16-6	13-6

Overhang dimension shall not exceed one-fourth of actual joist span.

Figure 3: **Single Span Deck - Joists Attached at House with Dropped Beam**

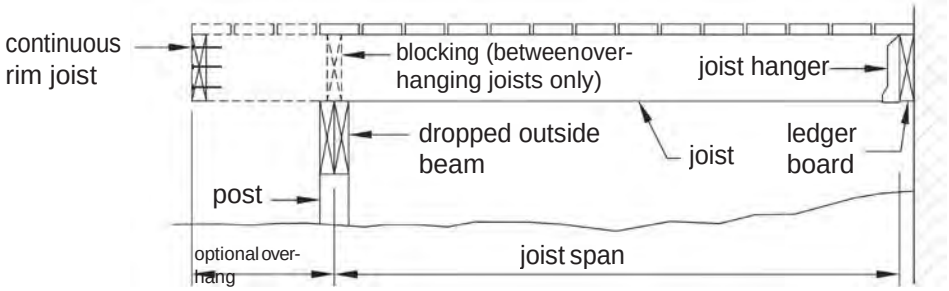

Figure 4: **Single Span Deck - Joists Attached at House with Flush Beam**

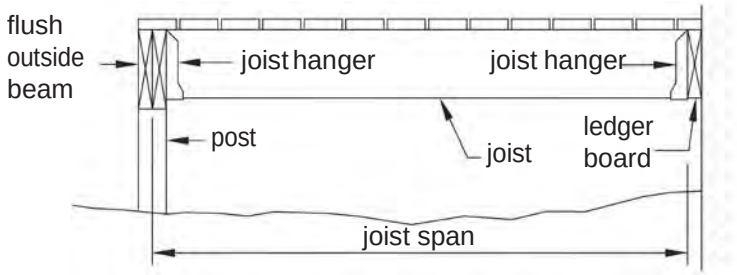

Figure 5: Multi-Span Deck - Joists with Dropped Beams

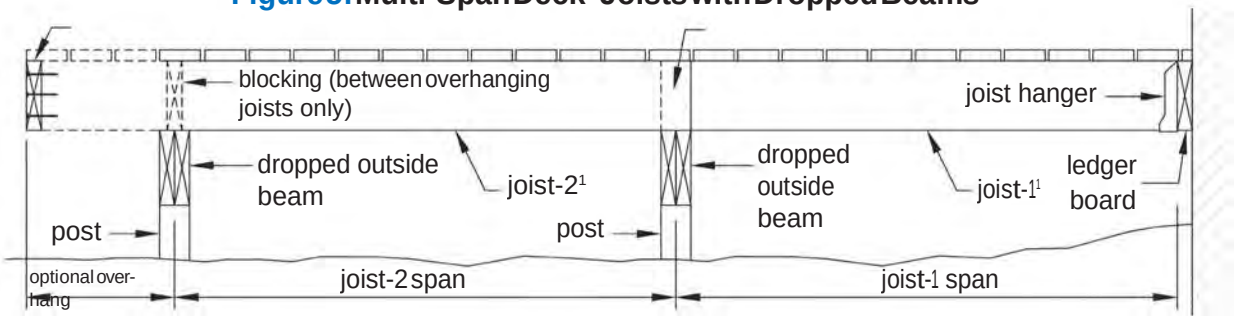

Figure 6: **Multi-Span Deck - Joists with Flush Beams**

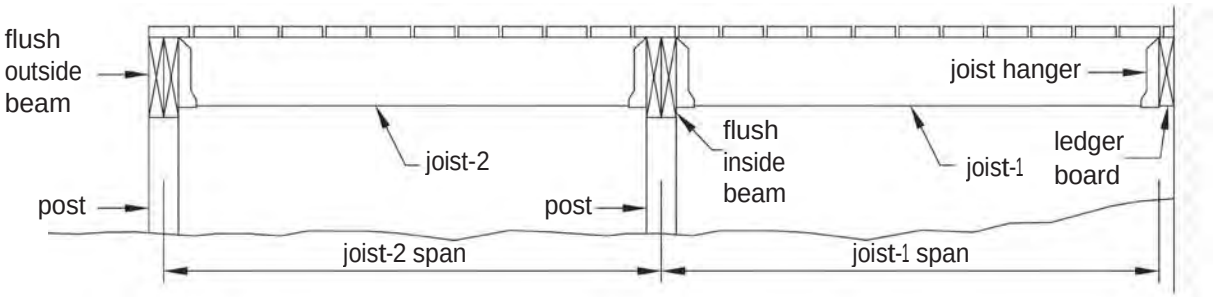

Figure 7: **Joists with Freestanding**

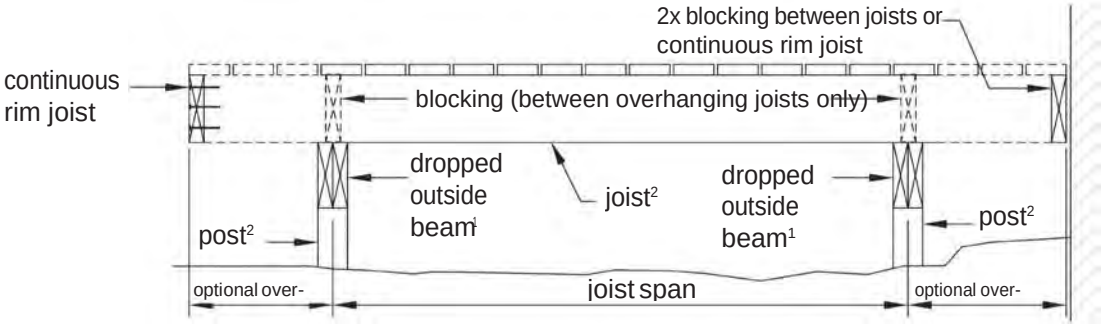

FRAMING AT PROJECTIONS

Additional framing and ledger board fasteners per Section 6 on Page 21 are required at projections such as chimneys or bay windows as shown in FIGURE 9. Each ply of the header shall be equal to the deck joist size. Joist hangers shall meet the requirements below.

JOIST HANGERS

- Joist hanger depth, D as shown in FIGURE 8, shall be greater than or equal to 60 percent of the joist depth.
- The manufactured width of the joist hanger shall accommodate the number of plies being carried.
- Do not bend hanger flanges to accommodate field conditions.
- Joist hangers shall be fastened to the ledger board or flush beam using its manufacturer's recommended screws. All other fasteners are permitted to be nails.
- Use joist hangers with inside flanges when clearances to the edge of the beam or ledger board dictate.
- Clip angles or brackets used to support framing members in lieu of joist hangers are prohibited.

JOIST -TO- BEAM CONNECTION

- Each joist shall be attached to the beam in accordance with FIGURE 10.
- Mechanical connectors or hurricane clips shall have a minimum capacity of 100 pounds in both uplift and lateral directions. Installation shall be per manufacturer's instructions.
- As shown in FIGURE 10, multi-span joists are permitted to span continuously over a dropped interior beam with one mechanical connector or overlap with a mechanical connector at each joist.

Figure 8: Joist Hangers

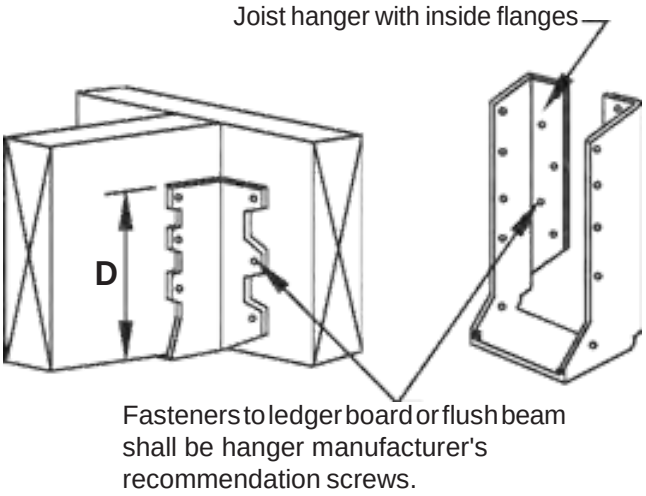

"Use joist hangers with inside flanges when clearances to the edge of the beam or ledger board dictate"

Figure 9: **Framing at Chimney or Bay Window**

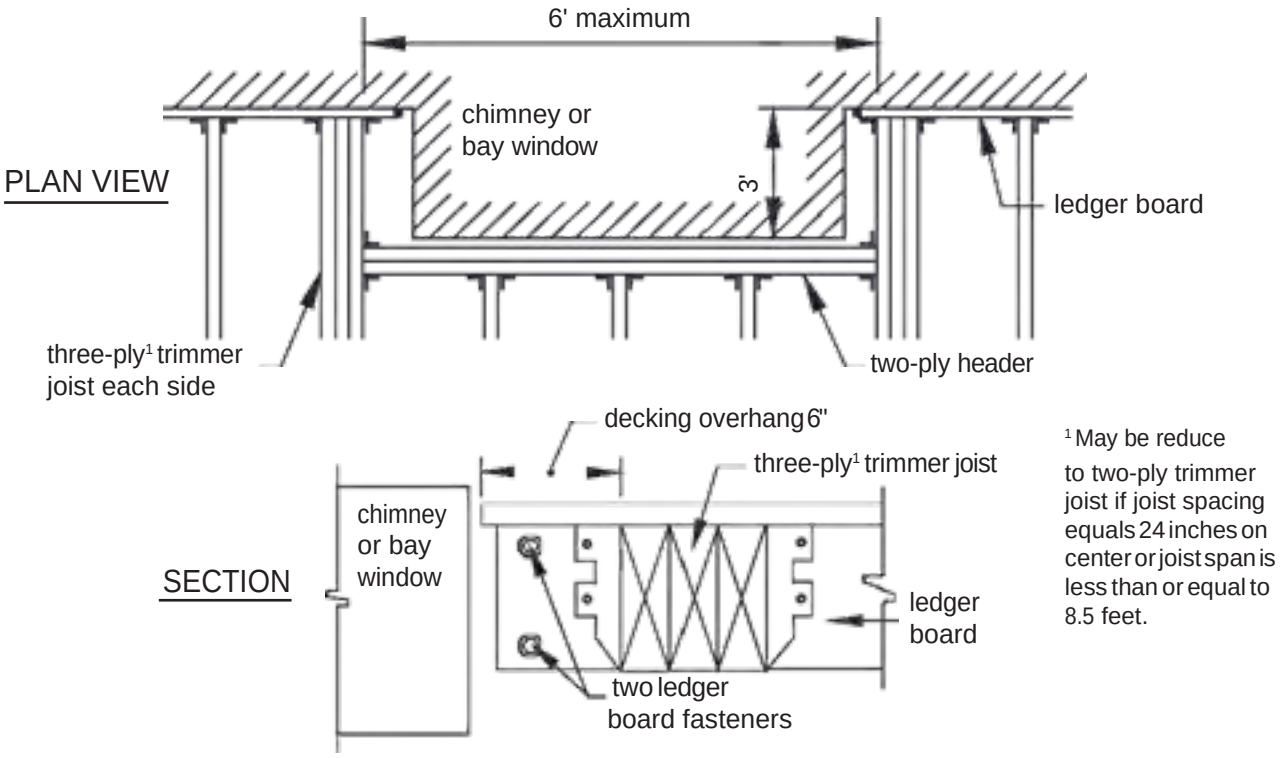

[1] May be reduce to two-ply trimmer joist if joist spacing equals 24 inches on center or joist span is less than or equal to 8.5 feet.

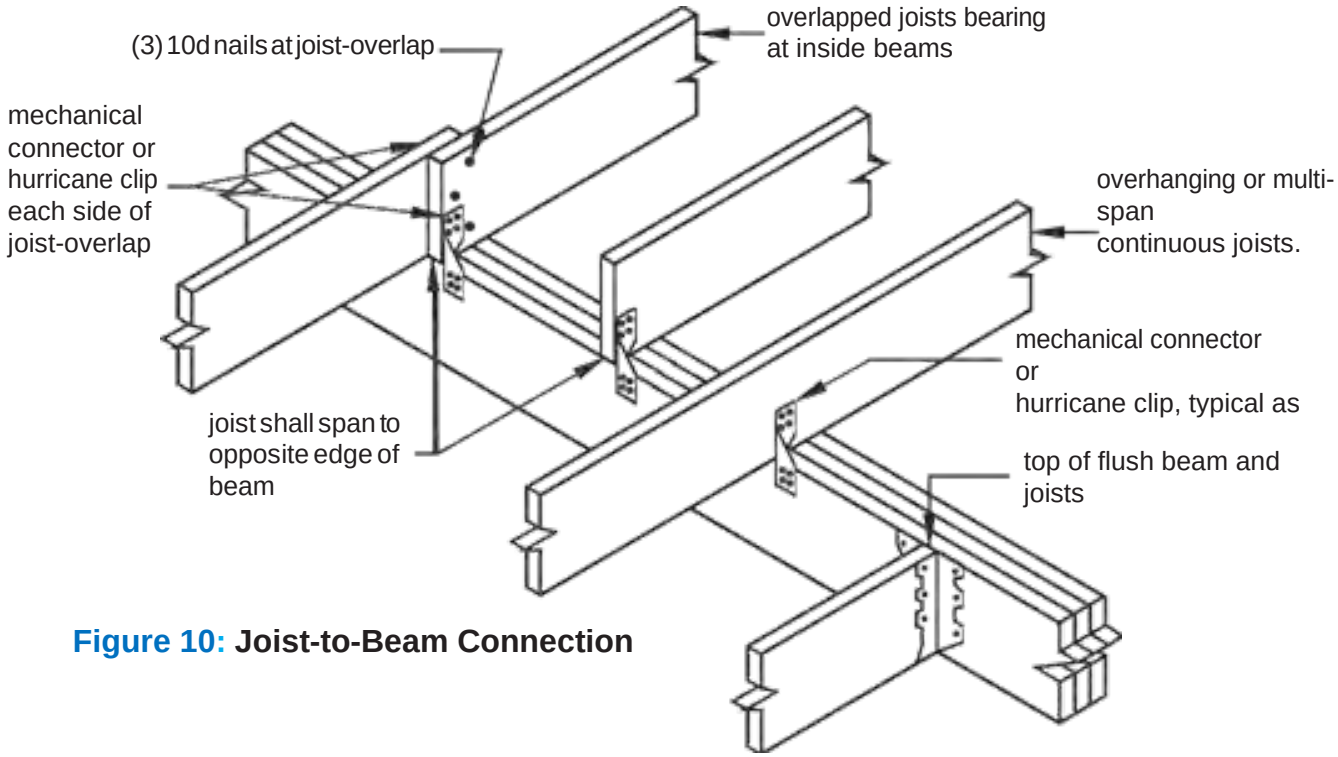

Figure 10: **Joist-to-Beam Connection**

Beams

• Beams are assembled, multi-ply framing members which span between supporting posts. Multi-span decks have more than one beam; spacing between beams is dependent on the allowable span lengths of the supported joists.
• Inside beams have joists bearing from each side. Outside beams have joists, with or without an overhang, bearing from one side.
• Dropped beams have joists bearing above; flush beams have joists with hangers bearing on its sides; see FIGURES 3 through 7 and FIGURE 11.
• Multi-span decks are permitted to mix flush and dropped beams.

"Beams are assembled, multi-ply framing members which span between supporting posts."

BEAM SIZE

• Beam size is based on its influence width and longest span length per TABLE 3. Beam influence width, as shown in FIGURE 11, is based on supported joists' span lengths and overhang dimensions.
• Beam span length, as shown in FIGURE 12, is measured between the centerlines of two adjacent posts and does not include the beam overhangs.
• Beams may overhang past the center of the post up to one-fourth of the actual beam span.
• Flush beams shall have a depth greater than or equal to the deepest joist.

BEAM ASSEMBLY

• The plies of the beam shall be fastened in accordance with FIGURE 13.
• The distance from the centerline of the fastener to the top or bottom edge of the beam shall be ½-inch minimum.
• The distance from the centerline of the fastener to the ends of the beam shall be 1-inch minimum.
• Beam plies are permitted to have splices. However, splices shall be located at inside posts connections as shown in FIGURE 12.

Figure 11: **Beam Influence Width**

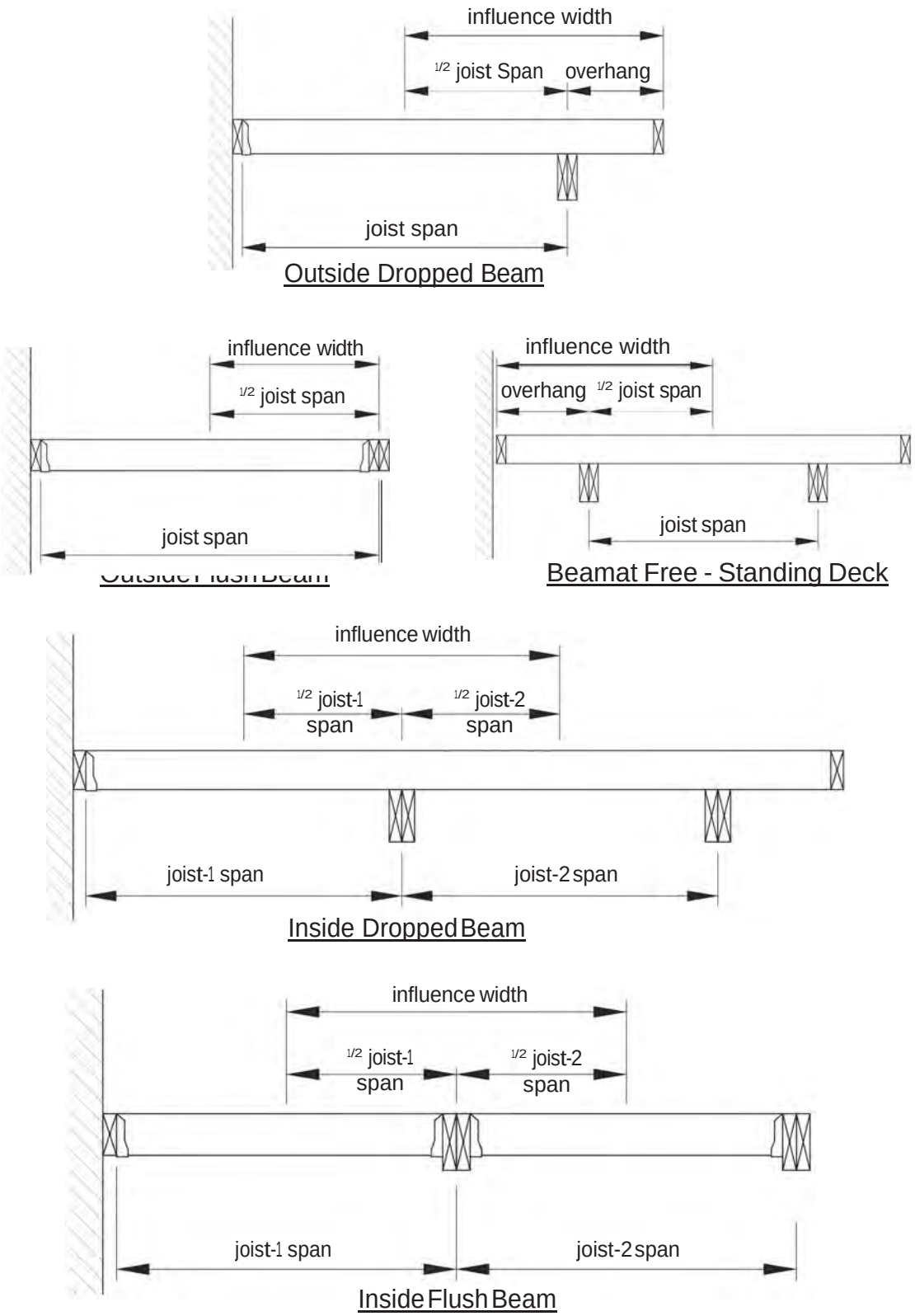

Figure 11: **Beam**

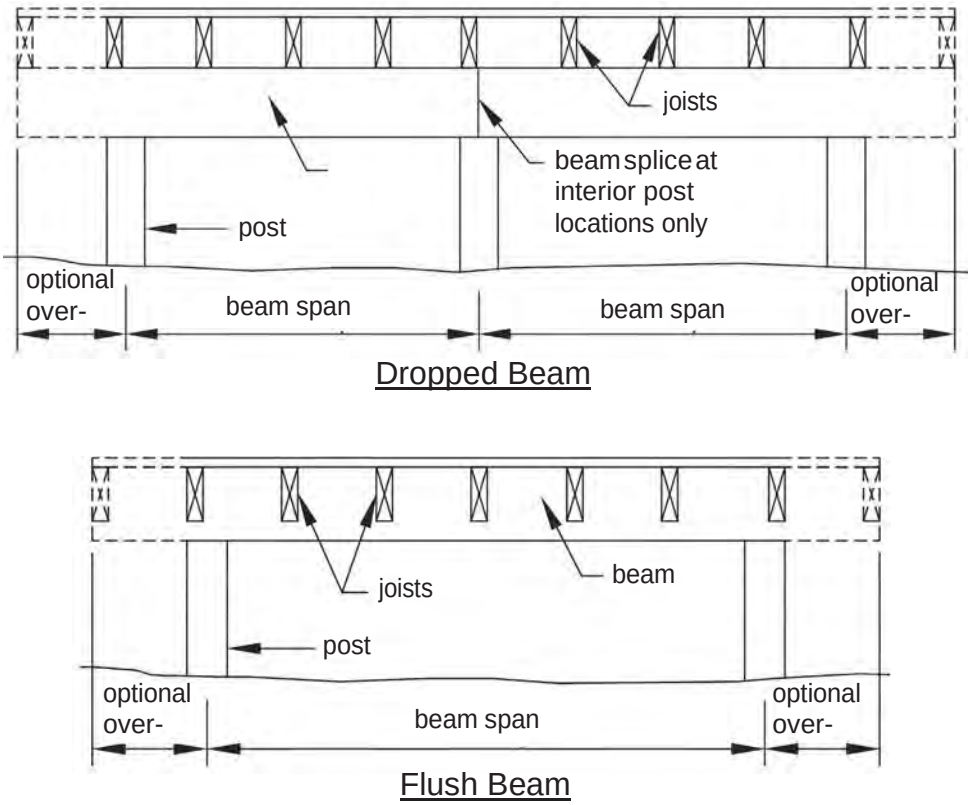

Figure 13: **Beam Ply Fasten-**

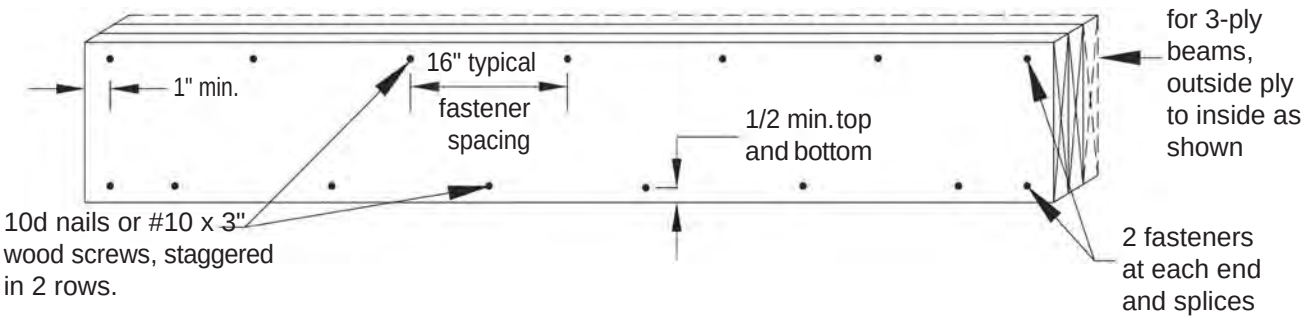

Table 3: Minimum Beam Size

2015 International Residential Code

TABLE R507.6
DECK BEAM SPAN LENGTHS[a, b] (ft. - in.)

SPECIES[c]	SIZE[d]	DECK JOIST SPAN LESS THAN OR EQUAL TO: (feet)						
		6	8	10	12	14	16	18
Southern pine	2 – 2 × 6	6-11	5-11	5-4	4-10	4-6	4-3	4-0
	2 – 2 × 8	8-9	7-7	6-9	6-2	5-9	5-4	5-0
	2 – 2 × 10	10-4	9-0	8-0	7-4	6-9	6-4	6-0
	2 – 2 × 12	12-2	10-7	9-5	8-7	8-0	7-6	7-0
	3 – 2 × 6	8-2	7-5	6-8	6-1	5-8	5-3	5-0
	3 – 2 × 8	10-10	9-6	8-6	7-9	7-2	6-8	6-4
	3 – 2 × 10	13-0	11-3	10-0	9-2	8-6	7-11	7-6
	3 – 2 × 12	15-3	13-3	11-10	10-9	10-0	9-4	8-10

Footings and Posts

FOOTING SIZE

Footing size is found by using TABLE 4 to obtain the footing type based on the beam influence width and the longest beam span length and TABLE 5 to determine the minimum footing dimensions.

- Footing sizes shall be consistent for each beam and designed for its maximum span.
- Footings shall bear on solid ground 30 inches below grade; footings shall be deeper if solid ground is not found. Bearing conditions must be verified by county inspectors prior to placement of concrete.
- When the edge of a deck footing is closer than 5 feet to an existing exterior house wall, the footing must bear at the same elevation as the existing house footings as shown in FIGURE 14.
- Do not construct footings over utility lines or service pipe. Call Miss Utility at 811 before you dig.

POST -TO- FOOTING CONNECTION

- Post attachment requirements shall be in accordance with FIGURE 15.
- Post anchors shall have a 1-inch minimum base.
- Posts shall be centered on the footing.

Figure 14: Footings Adjacent Existing House

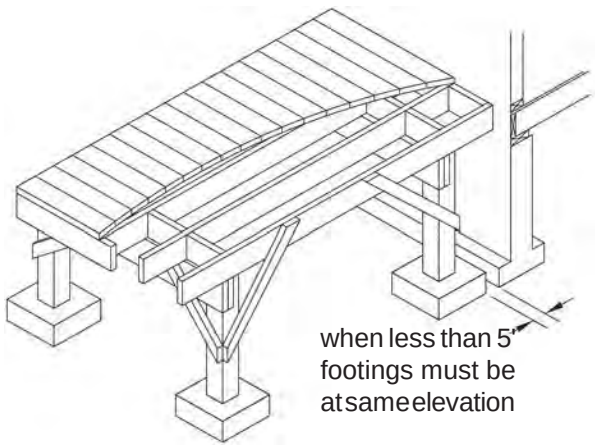

Table 5: Footing Size

Type	Sides of Square (inches)	Diameter of Round (inches)	Thickness (inches)
A	12	14	6
B	14	16	6
C	16	18	6
D	18	20	6
E	20	22	8
F	22	24	8
G	24	26	9
H	26	28	10

Table 4: Footing Type and Maximum Post Height [1]

Beam Influence Width (ft)	Longest Beam Span Length (feet), less than or equal to:													
less than or		6		8		10		12		14		16		18
equal to:	Footing Type	Max. Post Ht.	Foot-ing Type	Max. Post Ht.	Footing Type	Max. Post Ht.	Footing Type	Max. Post Ht.	Footing Type	Max. Post Ht.	Footing Type	Max. Post Ht.	Footing Type	Max. Post Ht.
2	A	14	A	14	A	14	A	14	A	14	B	14	B	14
3	A	14	A	14	B	14	B	14	B	14	B	14	C	14
4	A	14	B	14	B	14	B	14	C	14	D	14		
5	B	14	B	14	C	14	D	14	E	14				
6	B	14	B	14	D	14	E	14						
7	B	14	C	14	E	14	E	13						
8	B	14	C	14	E	13								
9	C	14	D	14	E	12								
10	D	14	E	13	F	11								
11	D	14	E	13										
12	E	14	F	12										
13	E	14	F	11										
14	E	13	F	10										
15	F	12	G	9										
16	F	12	H	9										
17	G	11	H	9										
18	G	11												

[1] Design conditions which fall within the shaded cells are prohibited.

Figure 15: Footings

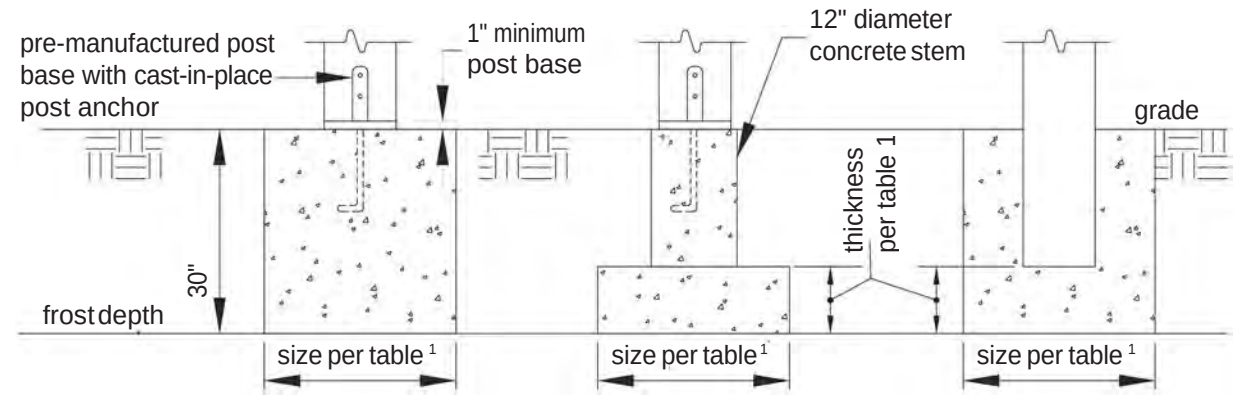

1 see table 5 for footing dimensions

POST SIZE & MAXIMUM HEIGHT

- Post size shall be 6x6 with a maximum height based on the corresponding beam influence width and longest beam span length in accordance with TABLE 4. Posts with a height less than or equal to 2.5 feet are permitted to be 4x4.
- Post height is measured from the top of the footing to the underside of the beam.
- Cut ends of posts shall be field treated with a wood preservative containing copper naphthenate which can be found in the paint department of most hardware or home center stores.

BEAM-TO- POST CONNECTION

- Beams shall be attached to 6x6 posts using one of the methods shown in FIGURE 16 or 17. Beams shall be attached to 4x4 posts using the method shown in FIGURE 17.
- 4x4 posts are prohibited from supporting three-ply beams.
- Beams shall not be attached to the sides of an un-notched post as shown in FIGURE 18.
- Pre-manufactured post caps shall be specifically designed for two- or three-ply beams and the post size used. Attachment shall be per manufacturer's instructions.

Figure 16: Notched 6x6 Post -to- Beam Connection

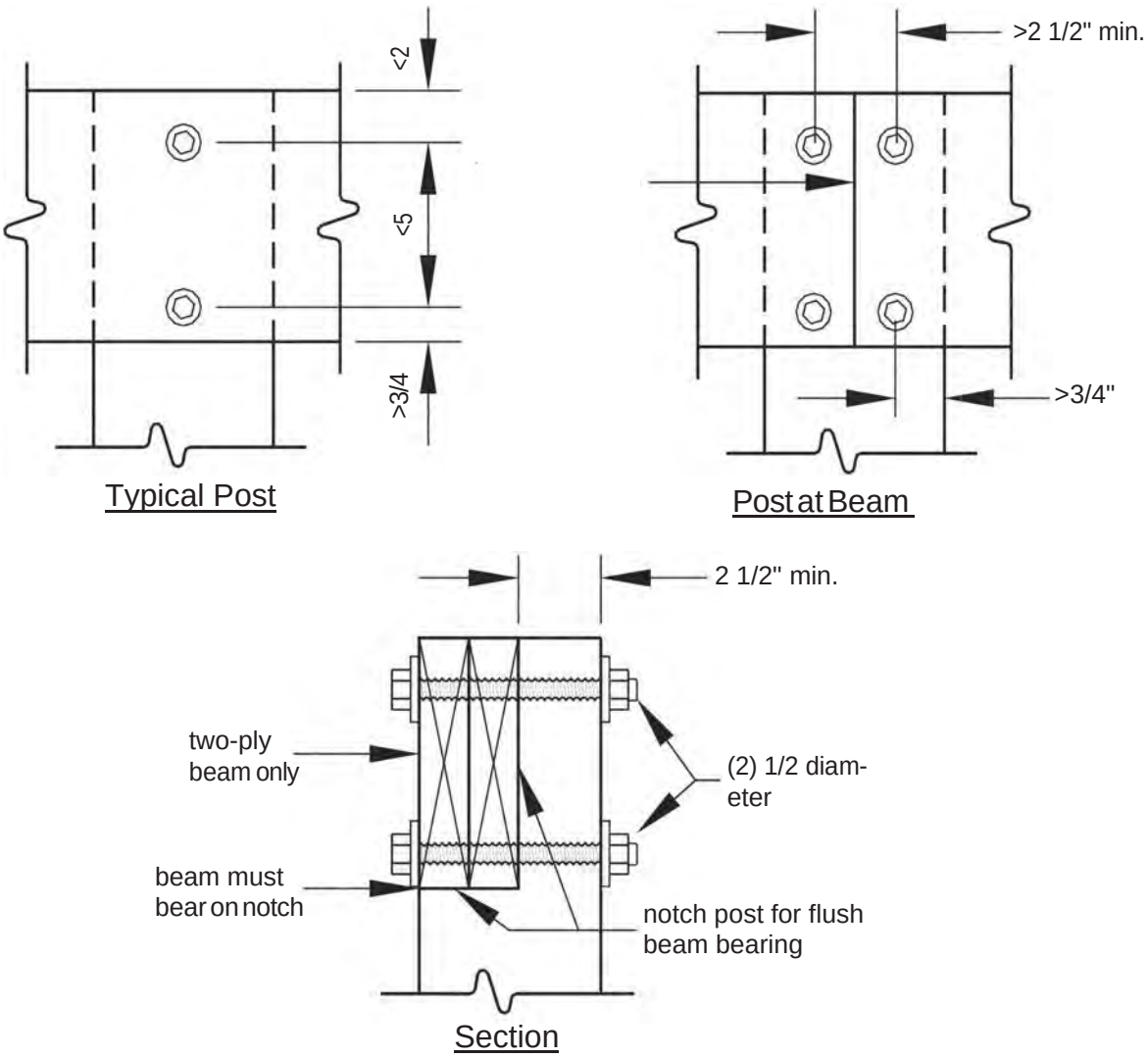

Figure 17: Post Cap Connection

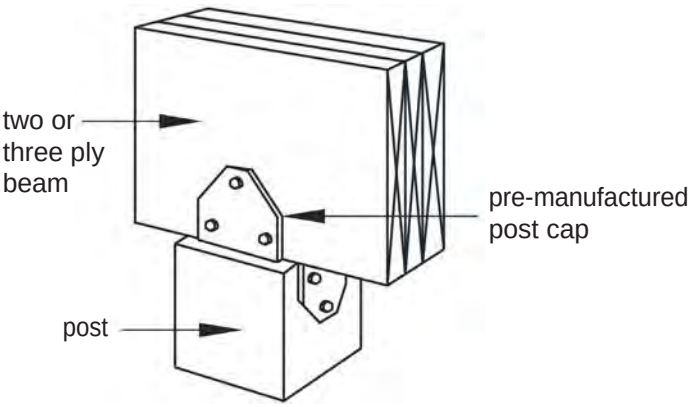

Figure 18: Prohibited Connection

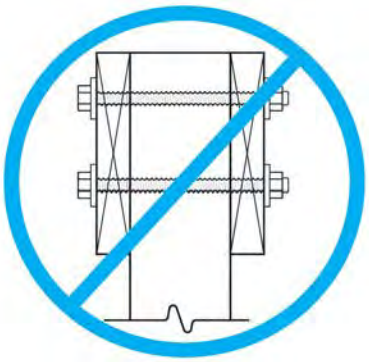

Ledger Board Attachment

GENERAL REQUIREMENTS

- Ledger boards shall be attached to the existing house in accordance with the requirements herein. Compliance is critical to ensure the safety and structural stability of your deck.
- Ledger board depth shall be greater than or equal to the depth of the deck joists, but not less than a 2x8.
- The ledger board shall be attached in accordance with one of the conditions shown in FIGURES 20 through 22.
- The existing band board shall be capable of supporting the deck. If this cannot be verified or existing conditions differ from the details herein, then a free-standing deck or an engineered design is required. The top of the ledger board and top of the deck joists shall be at the same elevation.

WOOD I-JOISTS

Many homes are constructed with wood I-joists, as shown in. Rather than utilize a 2x band board, these systems are often constructed with a minimum 1-inch thick engineered wood product (EWP) band board capable of supporting a deck. If a minimum 1-inch EWP or 2x band board is not present, then a free-standing deck or an engineered design is required.

FLASHING

Flashing shall be installed in accordance with the following requirements. See Page 6 for flashing material specifications. The exterior finish, i.e., house siding, must be removed prior to the installation of the ledger board. Continuous flashing, as shown in FIGURE 20, is required at the ledger board when attached to wood-framed construction.

LEDGER BOARD FASTENERS

General requirements: Ledger board fasteners shall be installed in accordance with this section. Placement and spacing shall be in accordance with FIGURE 24 and TABLE 6. Only those fastener types noted herein are approved for use; lead anchors are prohibited. Adequacy of connections will be verified by county inspectors.

THROUGH-BOLTS

Through-bolts shall have a minimum ½-inch diameter. Pilot holes for through-bolts shall be 17/32 to 9/16 inches in diameter. Through-bolts must be equipped with washers at the bolt-head and nut. Bolts should be tightened

six to 12 months after construction due to drying and wood shrinkage.

EXPANSION ANCHORS

Expansion anchors shall be used only when attaching a ledger board to a concrete or solid masonry wall as shown in FIGURE 21. The bolt or threaded rod of expansion anchors shall have a ½-inch diameter minimum; in some cases, this may require a 1/2-inch anchor size. Expansion anchors must be installed per manufacturer's instructions and shall be equipped with washers.

ADHESIVE ANCHORS

The adhesive anchors listed in TABLE 7 with a minimum ½-inch diameter threaded rod shall be used when attaching to concrete or solid or hollow masonry as shown in FIGURE 22. Anchors shall be installed per manufacturer's instructions and shall be equipped with washers. Adhesive cartridges must remain on the jobsite for inspector verification.

Table 7: Approved Adhesive Anchors

Manufacturer	Product
Red Head	Epcon A7
Hilti	HY-70

LAG SCREWS

Lag screws shall be hot-dipped galvanized or stainless steel with a ½-inch minimum diameter. Length and shank requirements shall be in accordance with FIGURE 25. Lag screws shall be equipped with washers and installed in the sequence below.

1. Drill a 1/2-inch diameter hole in the ledger board and a 5/16-inch diameter pilot-hole into the solid connection material of the existing house.
2. Insert the lag screw through the ledger board and into the pilot hole by turning. Do not drive with a hammer. Use soap or a wood-compatible lubricant as required to facilitate tightening.
3. Tighten each lag screw snugly, but do not over tighten so as to cause wood damage.

WOOD SCREWS

The wood screws listed in TABLE 8 with a 1/4-inch diameter may be used to attach to wood-framed construction. Wood screws shall have a sufficient length to fully penetrate the existing house band board. Installation shall be in conformance with the manufacturer's instructions.

Table 8: Approved Wood Screws

Manufacturer	Product
FastenMaster	LedgerLOK
Simpson Strong-Tie	SDS Strong-Drive Screws
Simpson Strong-Tie	SDWS Strong-Drive Screws

Figure 25: Lag Screw

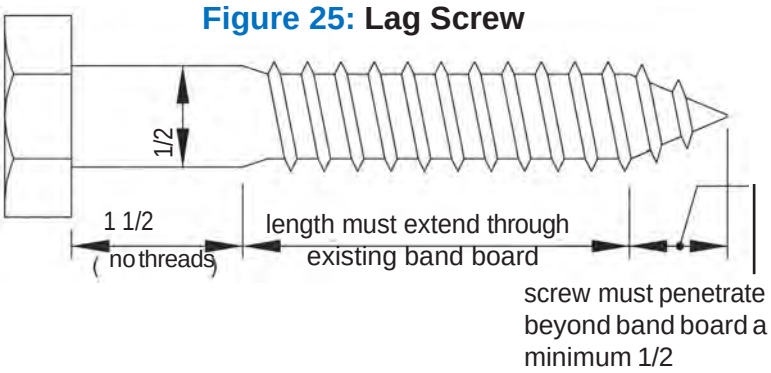

Figure 20: **Ledger Board -to- Band Board Attachment**

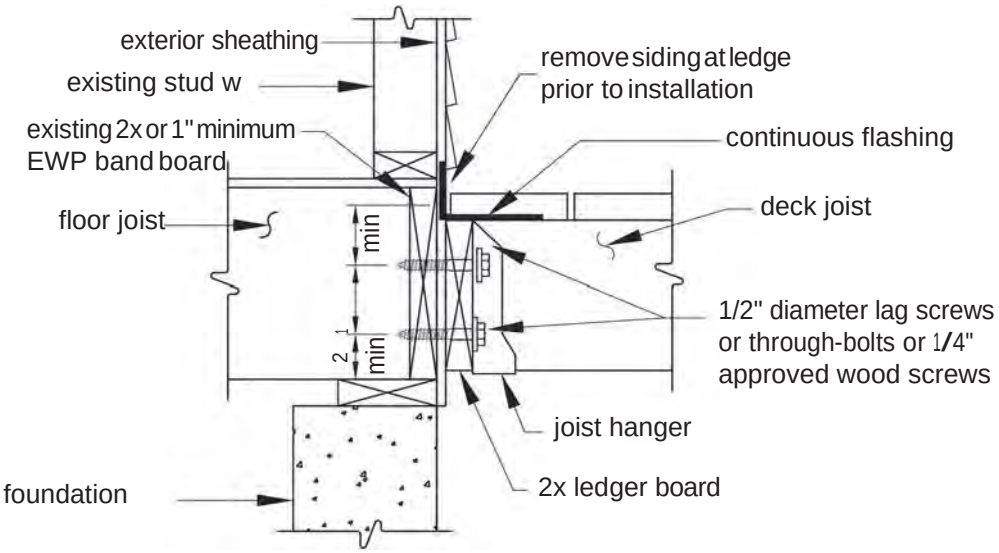

Figure 21: **Ledger Board -to- Solid Foundation Attach-**

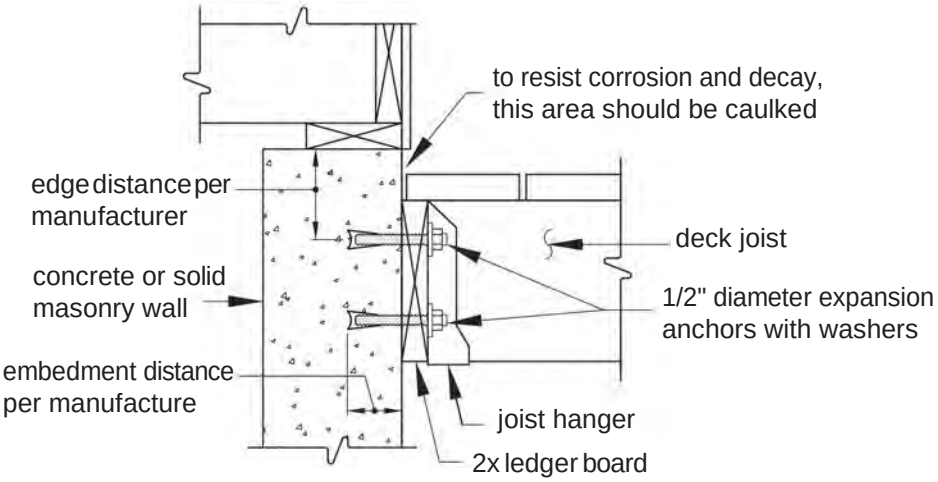

Figure 22: **Ledger Board -to- Hollow Foundation Attachment**

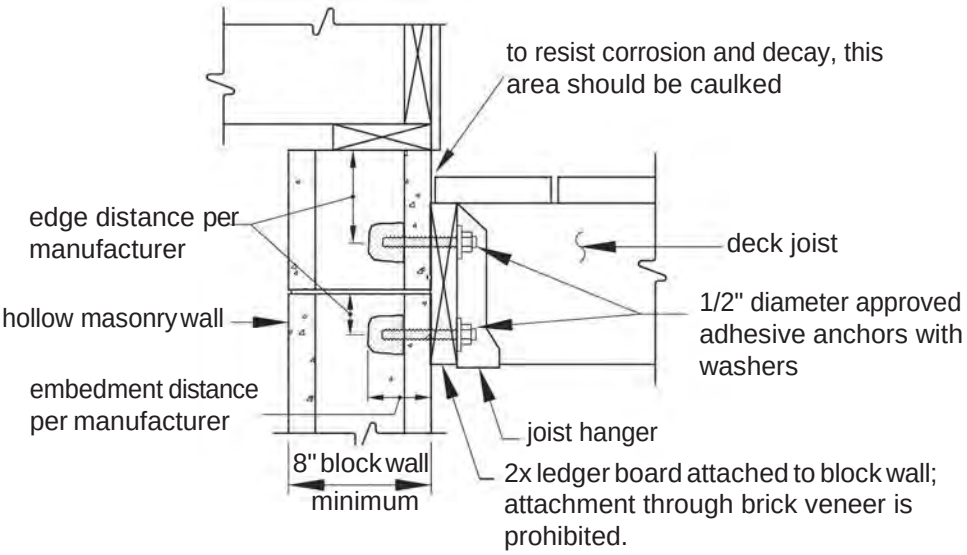

PROHIBITED LEDGER ATTACHMENTS

The ledger board attachment conditions shown below are prohibited. In such cases, a free-standing deck or engineering design is required.

Figure 23: Prohibited Ledger Attachments

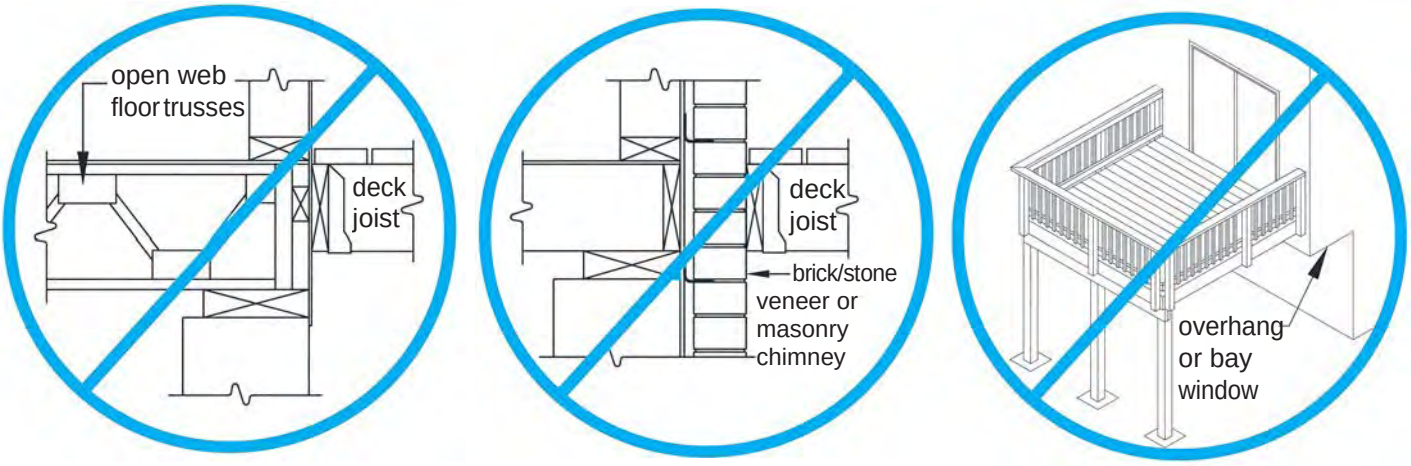

Figure 24: Ledger Board Fastener Spacing, Inches on Center

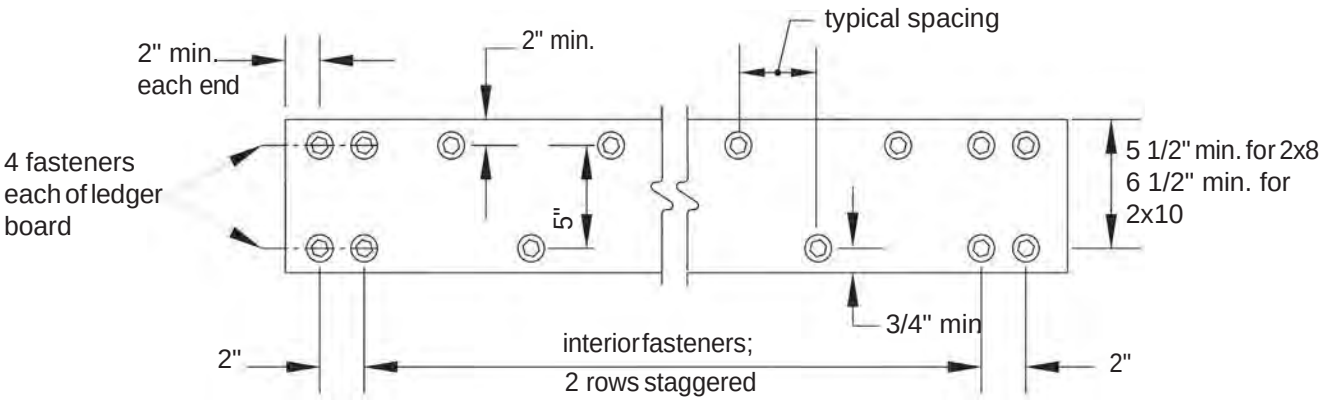

LEDGER BOARD FASTENERS

General requirements: Ledger board fasteners shall be installed in accordance with this section. Placement and spacing shall be in accordance with FIGURE 24 and TABLE 6. Only those fastener types noted herein are approved for use; lead anchors are prohibited. Adequacy of connections will be verified by county inspectors.

Table 6: Ledger Board Fastener Spacing, Inches, on Center

	Band	Joist Span (feet), less than or equal to:						
Fastener	Board	6	8	10	12	14	16	18
Lag Screws	EWP [1]	24	18	14	12	10	9	8
	2x lumber	30	23	18	15	13	11	10
Through-Bolts	EWP1	24	18	14	12	10	9	8
	2x lumber	36	36	34	29	24	21	19
SDS, Ledger LOK Wood Screws2	EWP1	12	9	7	6	5	4	4
	2x lumber	13	10	8	6	5	5	4
SDWS Wood Screws2	EWP [1]	14	10	8	7	6	5	5
	2x lumber	22	16	13	11	9	8	7
Expansion Anchors	–	36	36	34	29	24	21	19
Adhesive Anchors	–	32	32	32	24	24	16	16

1. EWP = 1-inch minimum manufactured engineered wood product; see Page 22 for more information.
2. Wood screws shall be permitted to be spaced in accordance with its current corresponding evaluation report if less restrictive than the values in TABLE 6.

Lateral Support

BRACING METHODS

All decks with post heights greater than 2.5 feet are required to be designed to resist lateral load caused by human activity and environmental forces. Use TABLE 9 to determine the applicable methods based on post height and deck type as defined in Section 3.

METHOD-1, TENSION-TIES (FOUR TOTAL):

- Install one tension-tie at each end joist and install the remaining two to inside joists equally spaced along the width of the deck as shown in FIGURE 26. A set of tension-ties shall be installed for each structurally independent section of deck.
- Tension-ties shall be attached to the joists and exterior wall per the manufacturer's instructions with specified fasteners as shown in FIGURE 27. Fasteners shall penetrate a minimum of 3 inches into the sill plate or top plate of a wood framed wall.
- Approved tension-ties are listed in TABLE 10. The minimum capacity of each tension-tie shall be 750 pounds.
- Where attaching to a concrete or solid masonry wall, fasteners are permitted to be substituted with expansion anchors or adhesive anchors with a threaded rod as recommended by the tension-tie manufacturer. The withdrawal capacity of the anchors shall be a minimum of 750 pounds. The anchor shall be installed per its manufacturer recommendations.

METHOD-2, KNEE-BRACING AT BEAM:

- Knee-bracing shall be comprised of 2x or 6x6 members.
- Decks shall have 2x knee-bracing installed at each post-beam location or 6x6 knee-bracing at end posts and both sides of every other interior post in accordance with FIGURE 28.
- Connections of knee-bracing shall be in accordance with FIGURE 30 or 31.

Table 10: Approved Tension-Ties

Manufacturer	Product
Simpson Strong-Tie	DTT1
USP	LTS19
USP	ADTT-TZ

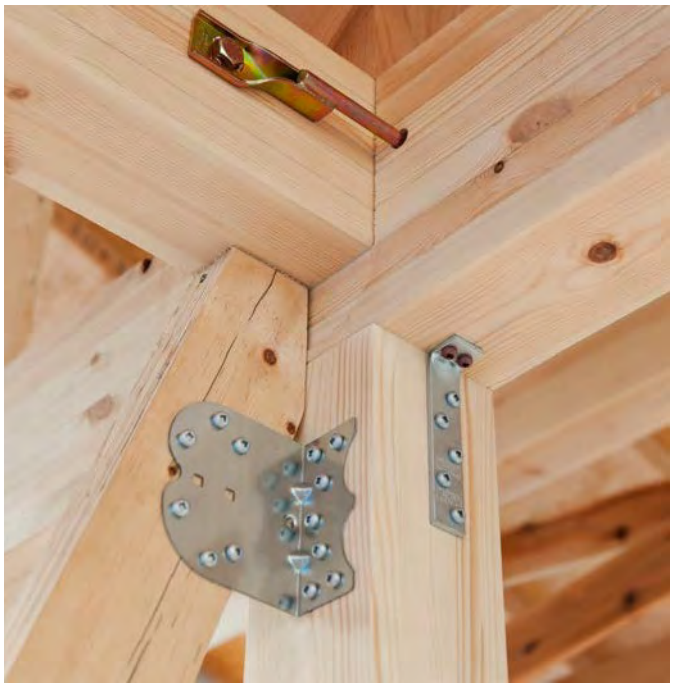

"All decks with post heights greater than 2.5 feet are required to be designed to resist lateral load caused by human activity and environmental forces."

Table 9: Lateral Support Requirements

Post Height (feet) less than or equal to:	Single Span Decks	Multi-span Decks	Free-standing Decks
2.5	None required	None required	None required
11	· Method 1 or · Method 2	· Method 2[1]	· Method 2[1] and · Method 3
14	· Method 1 and · Method 2	· Method 1 and · Method 2	· Method 1, · Method 2 and · Method 3

Figure 26: Method 1 - Tension Tie Locations

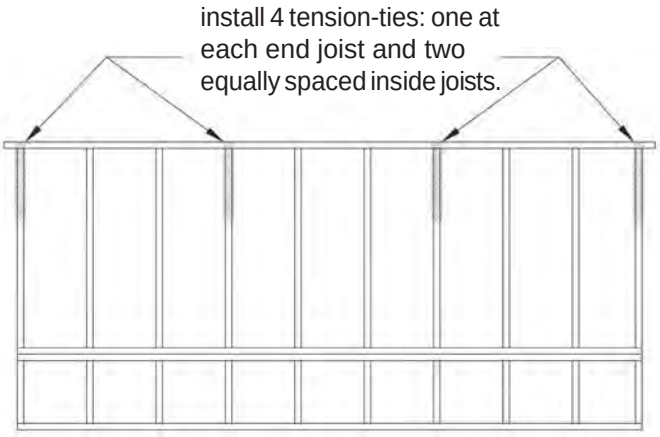

Figure 27: Method 1 - Tension-Tie Connection

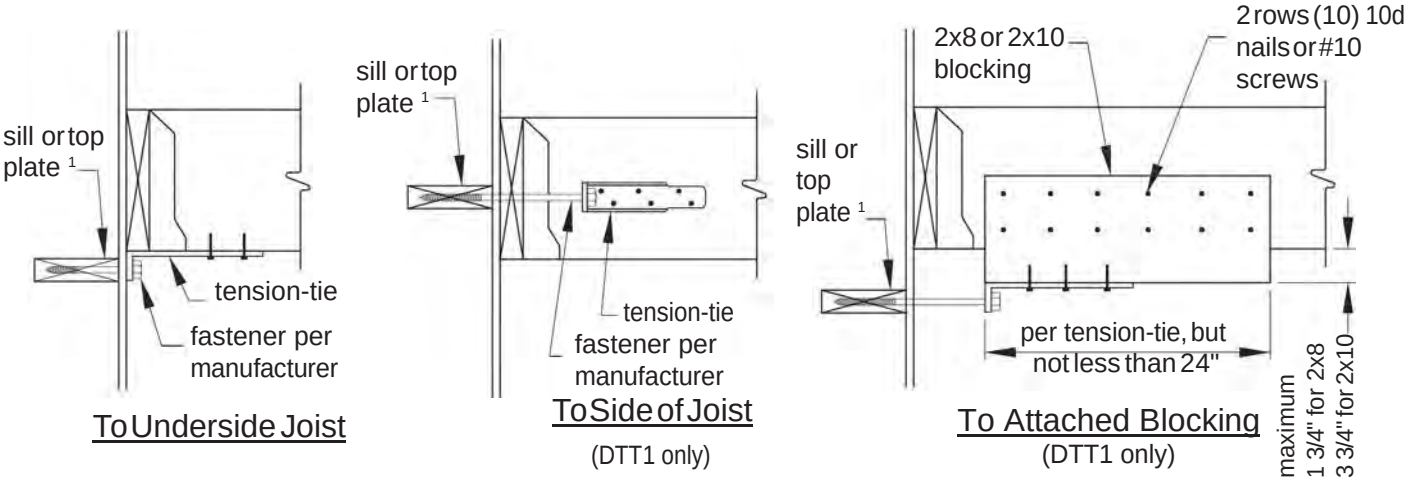

[1] Tension-ties may be anchored to concrete or solid masonry walls with expansion or adhesive anchors as permitted on Page 22

METHOD-2, KNEE-BRACING AT BEAM:

- Knee-bracing shall be comprised of 2x or 6x6 members.
- Decks shall have 2x knee-bracing installed at each post-beam location or 6x6 knee-bracing at end posts and both sides of every other interior post in accordance with FIGURE 28.
- Connections of knee-bracing shall be in accordance with FIGURE 30 or 31.

Method-2, Knee-bracing at beam:

- Knee-bracing shall be comprised of 2x or 6x6 members.
- Decks shall have 2x knee-bracing installed at each post-beam location or 6x6 knee-bracing at end posts and both sides of every other interior post in accordance with FIGURE 28.
- Connections of knee-bracing shall be in accordance with FIGURE 30 or 31.

METHOD-3, KNEE-BRACING AT JOISTS-POST LOCATIONS (free-standing decks only):

- Knee-bracing shall be comprised of 2x or 6x6 members.
- Knee-bracing shall be installed at each post-joist location in accordance with FIGURE 29.
- Connections of knee-bracing shall be in accordance with FIGURE 30 or 31.

Figure 28: Method 2 - Knee Bracing At Beam - Post Locations

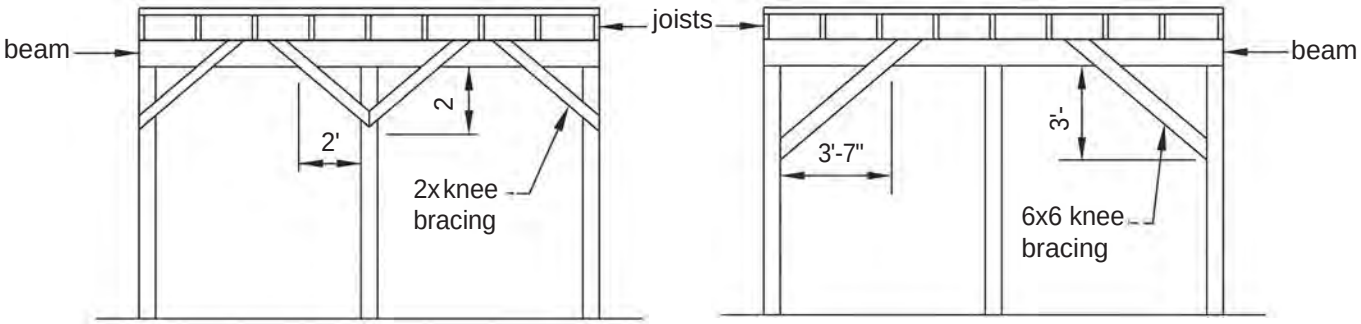

2x Knee Bracing

6x6 Knee Bracing

Figure 29: Method 3 - Knee Bracing At Joist-Post Locations

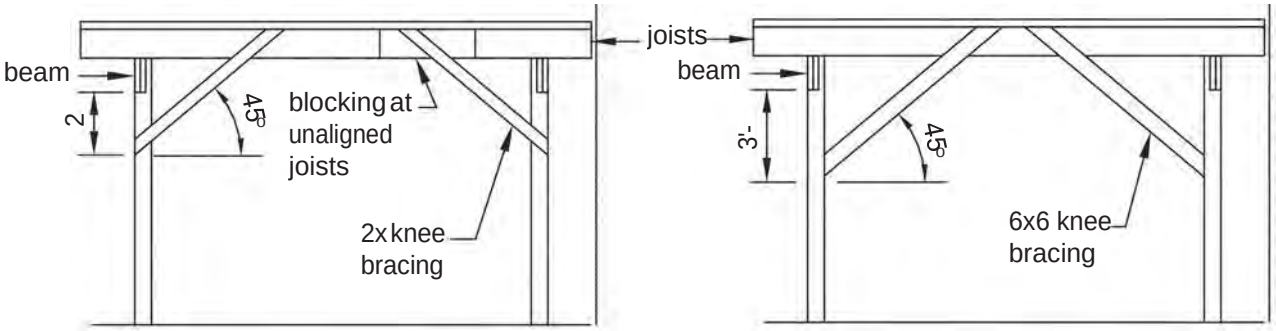

2x Bracing

6x6 Bracing

Figure 30: Typical Connections of 2x Knee Bracing

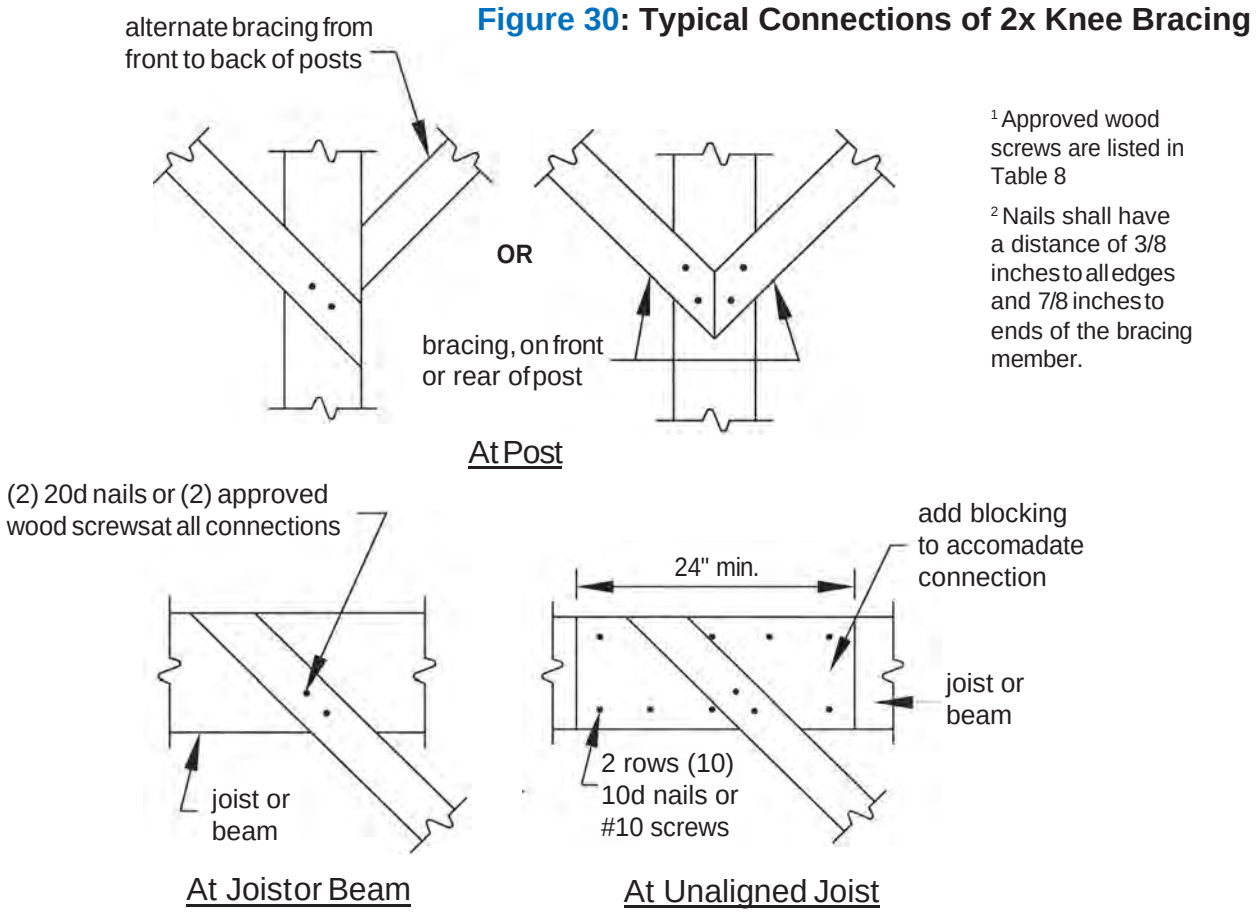

[1] Approved wood screws are listed in Table 8

[2] Nails shall have a distance of 3/8 inches to all edges and 7/8 inches to ends of the bracing member.

Figure 31: Typical Connections of 6x6 Knee-Bracing

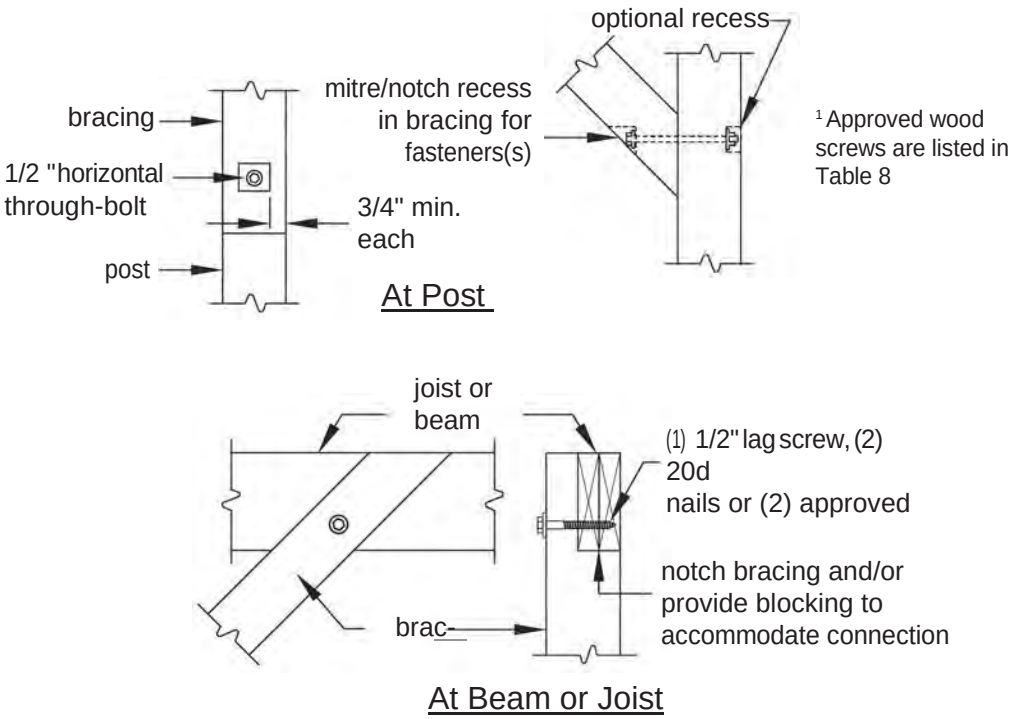

[1] Approved wood screws are listed in Table 8

Guards

GUARD CONSTRUCTION

A guard is required when a deck is greater than 30 inches above grade at a point 36 inches from the edge of the deck, as shown in FIGURE 32. Guards shall be constructed in accordance with the requirements herein; deviations are prohibited. Guards which are not required, but are nevertheless provided, must also comply with these requirements.

PLASTIC COMPOSITES

Plastic composites of equal dimension and complying with the criteria noted on Page 8 may be substituted for the guard cap and infill elements shown in FIGURE 33 provided the manufacturer's performance criteria specifically permit such use.

GUARD SYSTEMS

Guard systems with a valid evaluation report from an accredited listing agency are permitted as referenced on Page 8. Prefabricated systems without an evaluation report will require a plan review during the permit application process.

OPENINGS

Guards shall be constructed to restrict the passage of a 4-inch diameter sphere through any opening. Wet lumber shall be spaced such that when shrinkage occurs, a compliant opening is maintained.

GUARD POST CONNECTION

Guard posts shall be attached to the deck structure in accordance with the requirements below in order to ensure resistance to imposed loads.

- Notching guard posts, as shown in FIGURE 34, is prohibited.
- Hold-down anchors, as shown in FIGURE 35 and FIGURE 36, shall be used to attach the guard post to the end joist and rim joist, respectively.
- Hold-down anchors shall have a minimum capacity of 1,800 pounds.
- Guards may be attached to either side of the rim joist or end joist

Figure 32: When A Guard is Requried

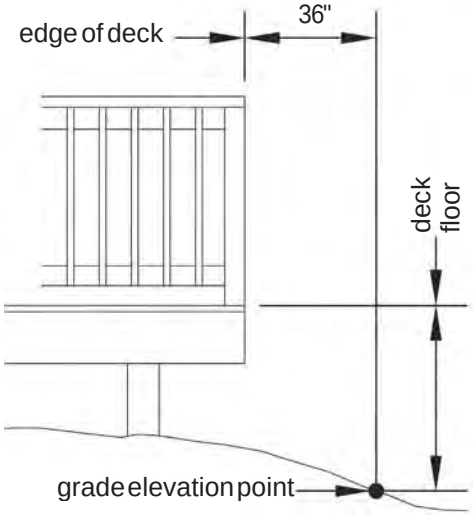

"A guard is required when a deck is greater than 30 inches above grade at a point 36 inches from the edge of the deck.."

Figure33: Guard Construction

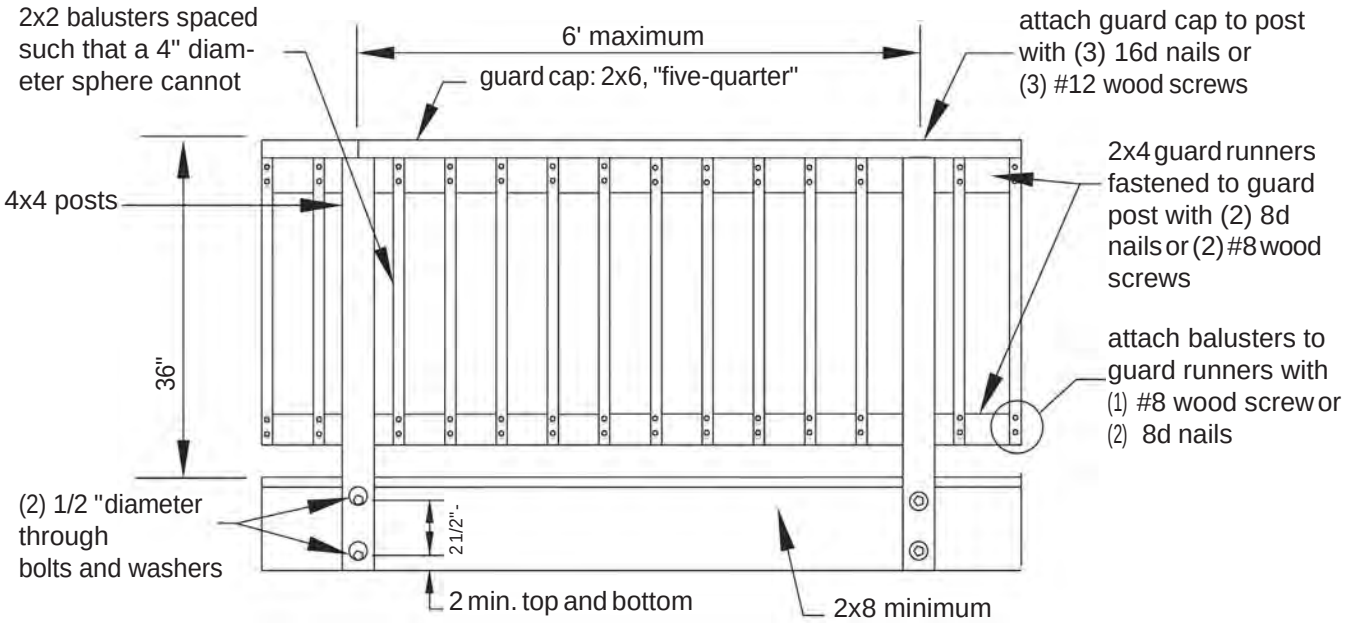

Figure34: Post Notches Prohibited

Figure 35: Guard Post -to- End Joist

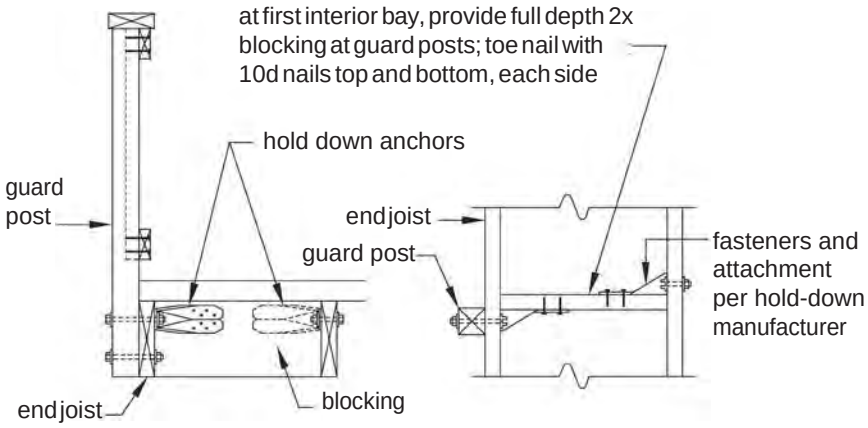

[1] Guards can be attached to either side of the end joist

Figured 36: Guard Post-to-Rim Joist

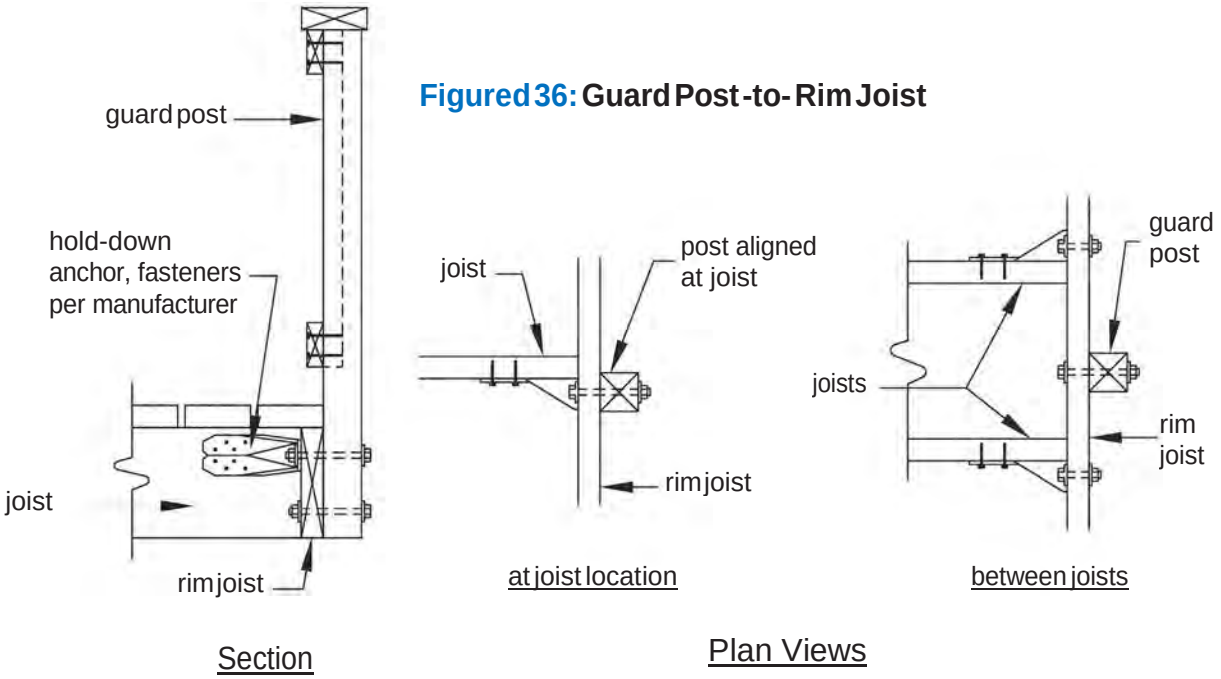

[1] Guards can be attached to either side of the rim

Stairs

STAIR GEOMETRY

Stairs shall be constructed with the dimensions listed below.

- The minimum width of a stairway is 36 inches.
- Stair geometry and opening limitations shall meet the requirements shown in FIGURE 37.

Treads, risers and nosing dimensions shall not deviate at each step by more than inches.

STAIR LANDING

- If the total vertical height of a stairway exceeds 12 feet, then an intermediate landing is required and must be constructed as a free-standing deck.
- Stair landings may be constructed with 4x4 posts with post heights no greater than 8 feet.
- Landing widths shall be equal to the total width(s) of the stairway(s) served.

STAIR CONSTRUCTION

Stair stringers:

- Stringers shall be sawn or solid 2x12s complying with the tread and riser geometry requirements.
- Stringers shall be spaced at a maximum of 18 inches on center.
- Stringers shall bear on footings and attach to the deck or landing per FIGURE 38.
- Stringer span length is measured using the horizontally projected distance between the bearing at each end and shall not exceed the dimensions shown in FIGURE 39.

SOLID STRINGER EXCEPTION:

Solid stringers of stairways with a width equal to 36 inches shall be permitted to have a span as shown in FIGURE 39.

- Throat size of cut stringers shall not exceed the value shown in FIGURE 39.

TREAD AND RISER MATERIAL:

- Tread material shall be equivalent to the decking specified on Page 8 and attached in accordance with FIGURE 40. The span of plastic composites shall be per manufacturer and in some cases may be less than 18 inches specified in FIGURE 40.
- Stairs constructed using the solid stringer exception shall have treads constructed of 2x wood material only; see FIGURE 40.
- Risers may be framed with 1x lumber minimum or equivalent plastic composite. Open risers are permitted provided the opening does not allow the passage of a 4-inch diameter sphere.

STAIR GUARDS

Stair guards are required when the total rise of the stair is greater than 30 inches at a point 36 inches from the edge of the stair. Stair guards shall be constructed in accordance with Section 8 and FIGURE 41.

HANDRAILS

- Stairs with four or more risers shall have a handrail on one side at a height between 34 to 38 inches above the nosing of the step.
- Handrails shall be attached to a stair guard or exterior wall acting as a barrier as shown in see FIGURE 42.
- Handrail and connecting hardware material shall be decay and corrosion resistant.
- Handrails shall have a smooth surface with no sharp corners and shall be graspable. Recessed sections may be shaped from a 2x6 or five-quarter board as shown in FIGURE 43.
- Handrails shall run continuously from a point directly over the lowest riser to a point directly over the highest riser and shall return to the guard or wall at each end.
- Handrails may be interrupted by guard posts at a turn in the stair only.
- Handrails installed in lieu of window safety glazing, as required on Page 8, shall be supported at appropriate intervals to ensure that when a 50-pound load is applied, the rail does not deflect into the glass.

Figure 37: Treads and

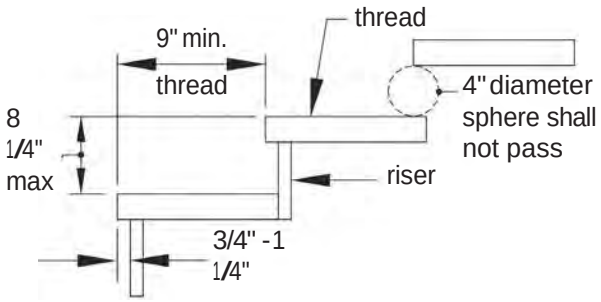

Figure 39: Maximum Stringer Span Length

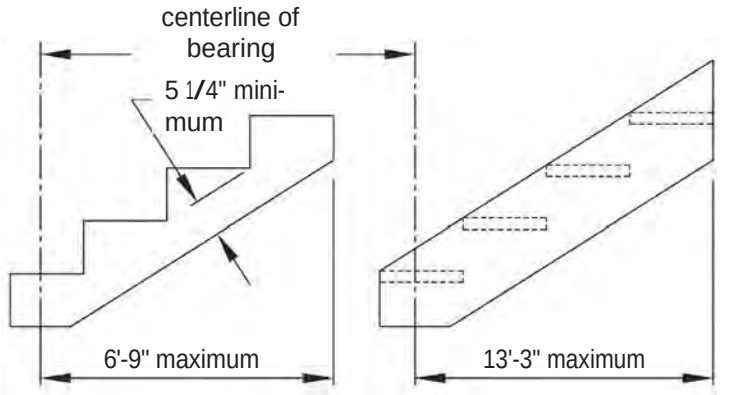

Stringer

Stringer Span Exception

Figure 40: Stringer Treads

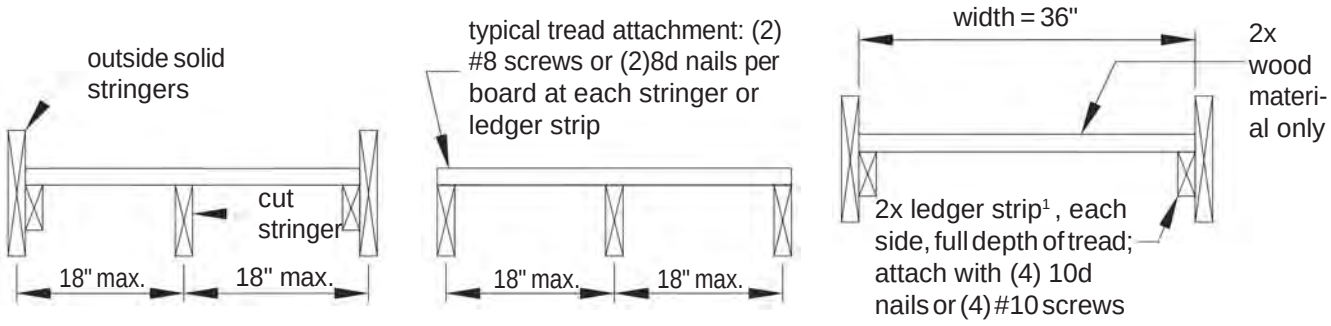

Sawn & Cut Stringer Combination

Cut Stringers

Solid Stringer Exception

Figure 38: Stringer Bearing

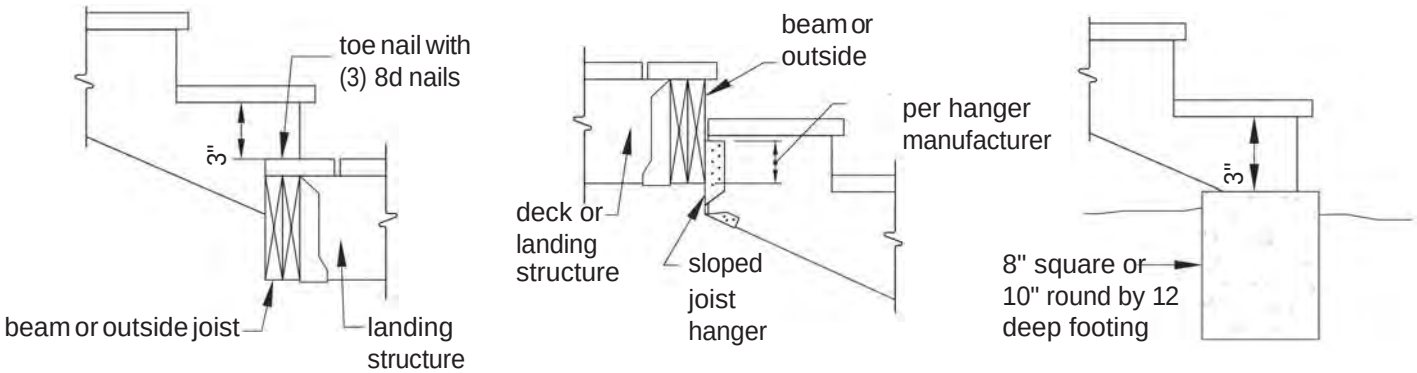

Lower Bearing at Landing

Upper Bearing at Deck or Landing

Lower Bearing at Footing

Figure 41: Stair

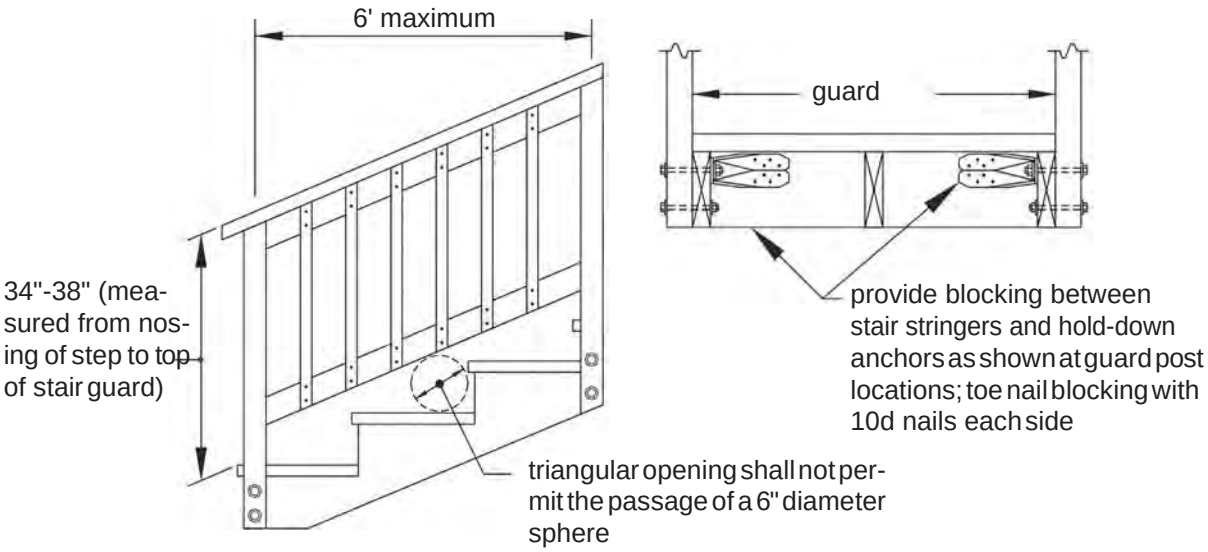

Figure 42: Handrails

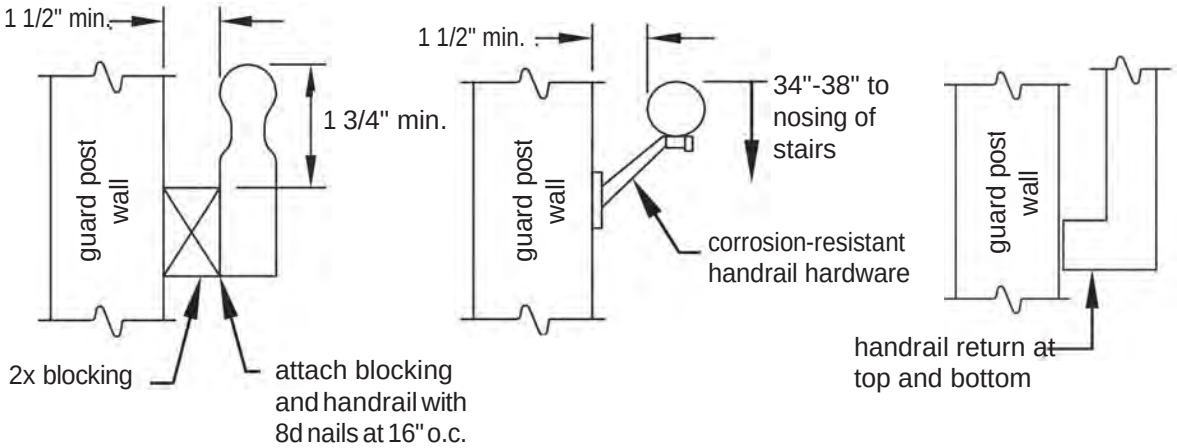

Figure 43: Handrail Grasp ability

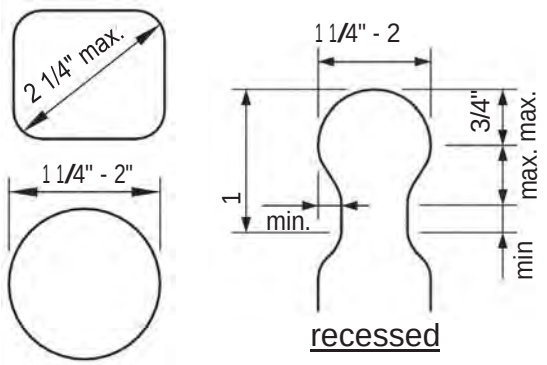

DECK DESIGN DETAILS

DECKING: **Size**: ☐ 2x4/2x6 ☐ five-quarter board **Direction**: ☐ angled ☐ perpendicular
Material: ☐ preservative-treated lumbe ☐ plastic composite ☐ non-native lumber
☐ PVC

JOIST 1: **Size**: ☐ 2x6 ☐ 2x8 ☐ 2x10 ☐ 2x12 **Spacing**: ☐ 12 in. ☐ 16 in.
☐ 24 in.
Longest Span: ___ft.-___in. **Overhang**: ___ft. __in.
Rim Joist: ☐ 2x6 ☐ 2x8 ☐ 2x10 ☐ 2x12 ☐ not applicable

JOIST 2: size: ☐ 2x6 ☐ 2x8 ☐ 2x10 ☐ 2x12 **Spacing**: ☐ 12 in. ☐ 16 in. ☐ 24 in.
Longest span: ___ft.-___in. **Overhang**: ___ft.__ in.
rim joist: ☐ 2x6 ☐ 2x8 ☐ 2x10 ☐ 2x12 ☐ not applicable

BEAM 1: **Plies**: ☐ 2 ☐ 3 **Size**: ☐ 2x6 ☐ 2x8 ☐ 2x10 ☐ 2x12
Influence width: ___ft.-___in. **Longest span**: ___ft.-___in. **Overhang**: ___ft. __in.
Footing size __ in. ☐ square ☐ round **Thickness** _in.
Post size: ☐ 4x4 ☐ 6x6 **Post height**: ___ft. __ in.

BEAM 2: **Plies**: ☐ 2 ☐ 3 **Size**: ☐ 2x6 ☐ 2x8 ☐ 2x10 ☐ 2x12
Influence width: ___ft.-___in. **Longest span**: ___ft.-___in. **Overhang**: ___ft. __in.
Footing size __ in. ☐ square ☐ round **Thickness** _in.
Post size: ☐ 4x4 ☐ 6x6 **Post height**: ___ft. __ in.

LEDGER BOARD: size: ☐ 2x8 ☐ 2x10 ☐ 2x12
☐ not applicable (Free-standing Deck) **Fastener**: ☐ through-bolt ☐ lag screw
☐ expansion anchor ☐ adhesive anchor ☐ wood screw **Spacing** __in.

R-Zone

District of Columbia - Zoning Residential District Development Standards (R & RF Zones)												
Per Title 11, DCMR of the 2016 Zoning Regulations (Subtitle D) -- As of Sept 6 2016												
		MINIMUM LOT DIMENSIONS		MAXIMUM BUILDING HEIGHT		MAXIMUM FLOOR AREA RATIO (F.A.R.)	MAXIMUM LOT OCCUPANCY	MINIMUM YARD SETBACKS			MINIMUM PERVIOUS SURFACE	MINIMUM GREEN AREA RATIO (G.A.R.)
		Width	Area					Rear	Side	Front		
	USE	(Feet)	(Sq. Ft.)		(Stories)	Ratio (To the tenth)	%	(Feet)	(Feet)	Code Section	%	Ratio (To the tenth)
R-1-A	Residential Uses	75	7,500	40	3	N/A	40	25	8	Refer to D-305	50	N/A
R-1-B	Residential Uses	50	5,000	40	3	N/A	40	25	8	Refer to D-305	50	N/A
R-2	Detached	40	4,000	40	3	N/A	40	20	8	Refer to D-305	30	N/A
	Semi-Detached	30	3,000	40	3	N/A	40	20	8	Refer to D-305	30	N/A
	All Other Structures	40	4,000	40	3	N/A	40	20	8	Refer to D-305	30	N/A
R-3	Detached	40	4,000	40	3	N/A	40	20	8	Refer to D-305	20	N/A
	Semi-Detached	30	3,000	40	3	N/A	40	20	8	Refer to D-305	20	N/A
	Attached	20	2,000	40	3	N/A	60	20	8	Refer to D-305	20	N/A
	All Other Structures	40	4,000	40	3	N/A	40	20	8	Refer to D-305	20	N/A
R-6	Residential Uses	75	7,500	40	3	N/A	30	25	8	Refer to D-405	50	N/A
R-7	Residential Uses	50	5,000	40	3	N/A	30	25	8	Refer to D-405	50	N/A
RF-1	Semi-Detached	30	3,000	35	3	N/A	60	20	5ft if new or 2 for existing per E§307	Refer to E-305	Refer to E-204	N/A
	Row Dwelling or Flat	18	1,800	35	3	N/A	60	20	none prescribed	Refer to E-305	Refer to E-204	N/A
	All Other Structures	40	4,000	35	3	N/A	40	20	5ft if new or 2 for existing per E§307	Refer to E-305	Refer to E-204	N/A
RF-2	Semi-Detached	30	3,000	35	3	N/A	60	20	5ft if new or 2 for existing per E§407	Refer to E-405	Refer to E-204	N/A
	Row Dwelling or Flat	18	1,800	35	3	N/A	60	20	none prescribed	Refer to E-405	Refer to E-204	N/A
	All Other Structures	40	4,000	35	3	N/A	40	20	5ft if new or 2 for existing per E§407	Refer to E-405	Refer to E-204	N/A
RF-3	Semi-Detached	30	3,000	40	3	N/A	60	20	5ft if new or 2 for existing per E§507	Refer to E-505	Refer to E-204	N/A
	Row Dwelling or Flat	18	1,800	40	3	N/A	60	20	none prescribed	Refer to E-505	Refer to E-204	N/A
	All Other Structures	40	4,000	40	3	N/A	40	20	5ft if new or 2 for existing per E§507	Refer to E-505	Refer to E-204	N/A

RF-Zone

District of Columbia - Zoning Residential District Development Standards (RF-Zones)												
Per Title 11, DCMR of the 2016 Zoning Regulations (Subtitle E) -- As of Sept 6 2016												
		MINIMUM LOT DIMENSIONS		MAXIMUM BUILDING HEIGHT		MAXIMUM FLOOR AREA RATIO (F.A.R.)	MAXIMUM LOT OCCUPANCY	MINIMUM YARD SETBACKS			MINIMUM PERVIOUS SURFACE	MINIMUM GREEN AREA RATIO (G.A.R.)
		Width	Area					Rear	Side	Front		
ZONE	USE	(Feet)	(Sq. Ft.)	(Feet)	(Stories)	Ratio (To the tenth)	%	(Feet)	(Feet)	Code Section	%	Ratio (To the tenth)
RF-1	Row Dwelling/Flat	18	1,800	35	3	N/A	60	20	N/A	Refer to E-305	10	N/A
	IZ Row Dwelling/Flat	15	1,500	35	3	N/A	60	20	N/A	Refer to E-305	O	N/A
	Semi-Detached Dwelling	30	3,000	35	3	N/A	60	20	5	Refer to E-305	20	N/A
	All Other Structures	40	4,000	35	3	N/A	40	20	N/A	Refer to E-305	50	N/A
RF-2	Row Dwelling/Flat	18	1,800	35	3	N/A	60	20	N/A	Refer to E-405	10	N/A
	IZ Row Dwelling/Flat	15	1,500	35	3	N/A	60	20	N/A	Refer to E-405	O	N/A
	Semi-Detached Dwelling	30	3,000	35	3	N/A	60	20	5	Refer to E-405	20	N/A
	All Other Structures	40	4,000	35	3	N/A	40	20	N/A	Refer to E-405	50	N/A
RF-3	Row Dwelling/Flat	18	1,800	35	3	N/A	60	20	N/A	Refer to E-505	10	N/A
	IZ Row Dwelling/Flat	15	1,500	35	3	N/A	60	20	N/A	Refer to E-505	O	N/A
	Semi-Detached Dwelling	30	3,000	35	3	N/A	60	20	5	Refer to E-505	20	N/A
	All Other Structures	40	4,000	35	3	N/A	40	20	N/A	Refer to E-505	50	N/A
RF-4	Row Dwelling/Flat	18	1,800	40	3	1.8	60	20	N/A	Refer to E-605	10	N/A
	IZ Row Dwelling/Flat	15	1,500	40	3	1.8	60	20	N/A	Refer to E-605	O	N/A
	Semi-Detached Dwelling	30	3,000	40	3	1.8	60	20	5	Refer to E-605	20	N/A
	All Other Structures	40	4,000	40	3	1.8	60	20	N/A	Refer to E-605	50	N/A
RF-5	Row Dwelling/Flat	18	1,800	50	4	1.8	60	20	N/A	Refer to E-605	10	N/A
	IZ Row Dwelling/Flat	15	1,500	50	4	1.8	60	20	N/A	Refer to E-605	O	N/A
	Detached Dwelling	30	3,000	40	3	1.8	60	20	5	Refer to E-605	20	N/A
	Semi-Detached Dwelling	30	3,000	40	3	1.8	60	20	5	Refer to E-605	20	N/A
	All Other Structures	40	4,000	50	4	1.8	60	20	N/A	Refer to E-605	50	N/A

RA - Zone

District of Columbia - Zoning Residential District Development Standards (RA-Zones)											
Per Title 11, DCMR of the 2016 Zoning Regulations (Subtitle F) -- As of Sept 6 2016											
		MINIMUM LOT DIMEN-SIONS		MAXIMUM BUILDING HEIGHT		MAXIMUM FLOOR AREA RATIO (F.A.R.)	MAXIMUM LOT OCCUPANCY	MINIMUM YARD SETBACKS		MINIMUM PER-VIOUS SURFACE	MINIMUM GREEN AREA RATIO (G.A.R.)
		Width	Area					Rear	Side		
ZONE	USE	(Feet)	(Sq. Ft.)	(Feet)	(Sto-ries)	Ratio (To the tenth)	%	(Feet)	(Feet)	%	Ratio (To the tenth)
RA-1	Row Dwelling	N/A	1,800	40	3	0.9	40	20	3 in/ ft of ht. or (8 ft.)	N/A	0.4
	All Other Structures	N/A	N/A	40	3	0.9	40	20	8	N/A	0.4
RA-2	Row Dwelling	N/A	N/A	50	N/A	1.8	60	15 ft or 4 in./ft of ht.	None	N/A	0.4
	All Other Structures	N/A	N/A	50	N/A	1.8	60	15 ft or 4 in./ft of ht.	8	N/A	0.4
RA-3	Row Dwelling	N/A	N/A	50	N/A	1.8	60	15 ft or 4 in./ft of ht.	None	N/A	0.4
	All Other Structures	N/A	N/A	50	N/A	1.8	60	15 ft or 4 in./ft of ht.	8	N/A	0.4
RA-4	Row Dwelling	N/A	N/A	90	N/A	3.5	75	15 ft or 4 in./ft of ht.	None	N/A	0.3
	All Other Structures	N/A	N/A	90	N/A	3.5	75	15 ft or 4 in./ft of ht.	8	N/A	0.3
RA-5	All Other Structures	N/A	N/A	90	N/A	5.0	75	12 ft or 3 in./ft of ht.	8	N/A	0.3
	Apartment House	N/A	N/A	90	N/A	6.0	75	12 ft or 3 in./ft of ht.	None	N/A	0.3
	Row Dwelling	N/A	N/A	90	N/A	6.0	75	12 ft or 3 in./ft of ht.	None	N/A	0.3
	IZ Bonus Density	N/A	N/A	90	N/A	6.0	90	12 ft or 3 in./ft of ht.	None	N/A	0.3
RA-6	All Other Structures	N/A	N/A	40	3	0.9	40	20	3 in/ ft of ht. or (8 ft.)	N/A	0.4
	Detached Dwelling	N/A	N/A	40	3	0.9	40	20	8	N/A	0.4
	Semi-Detached Dwelling	N/A	N/A	40	3	0.9	40	20	8	N/A	0.4
RA-7	All Structures	N/A	N/A	40	3	1.8	60	4 in/ft of ht. or 15 ft.	None	N/A	0.4
RA-8	All Structures	N/A	N/A	50	N/A	1.8	60	4 in/ft of ht. or 15 ft.	None	N/A	0.4
RA-9	All Structures	N/A	N/A	90	N/A	3.5	75	4 in/ft of ht. or 15 ft.	None	N/A	0.4
RA-10	All Structures	N/A	N/A	90	N/A	5.0	75	12 ft or 3 in./ft of ht.	None	N/A	0.4

CHECKLIST AND FEES

Deck Permit Fees

Building Permit Fee	Construction valued less than $500	Construction valued between $501- $1,000	Construction valued between $1001- $1,000,000
	$36.50	$71.50	($30 + 2% of cost)+10%
Green Building Fee	Add 0.13% of construction value		
Enhancement Fee	A 10% Additional fee will be applied to the total cost.		

Customer Checklist

- **Plat completed and ready for review.**
  Information about plats can be found here.

- **Sketches of your deck on graph paper.** Blank copies at the back of guide.

  a. **Floor plan including the relationship to your home, dimensions and location of posts.**
  b. **Elevation plan including the number of feet from the ground to top of the deck floor.**

- **Complete the Deck Design Details, page 38**

DESIGN YOUR DECK

DESIGN YOUR DECK

With the DCRA Deck Guide:

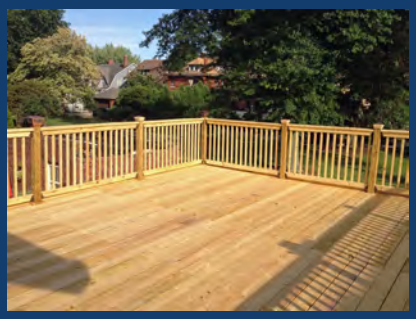

Customers are Empowered and Save Money

The Deck Guide was created as a resource for residents looking to design their decks without the help of an architect or engineer. While you certainly can hire a professional, our goal was to give you everything you need—saving you time and money.

Customers are Safer

The Deck Guide has been updated to reflect the most recent construction codes, ensuring that your project will be in compliance with current safety standards.

Customers Move Forward Faster

This streamlined process will save you time when you submit plans and apply for a permit. Once applications have been submitted and accepted, customers can have permits in hand in as little as 2-3 business days (3-5 days for deck plans that don't utilize the Deck Guide).

For the fastest and easiest way to contact us, email us at dcra@dc.gov, fill out our online customer inquiry form, call (202) 442-4400 or use the live chat feature available on our website during normal business hours

dcra
WE ARE WASHINGTON DC
GOVERNMENT OF THE DISTRICT OF COLUMBIA
MURIEL BOWSER, MAYOR